ABB MEASUREMENT & ANALYTICS | DATA SHEET

CoriolisMaster FCB400, FCH400

Coriolis mass flowmeter

Measurement made easy

High-precision measurement of mass and volume flow, density, temperature and concentration with just one device

MID / OIML approval for legal metrology

Up to five modular I/Os

- Optional plug-in cards
- Automatic firmware update
- Integrated solutions for filling operations and concentration measurement

SmartSensor

- All digital solution
- Measuring device intelligence located directly in the sensor
- Lower pressure loss

Integrated VeriMass device verification and diagnosis

- Predictive maintenance in the process
- Extended maintenance cycles
- Reduced maintenance effort

Overview – models

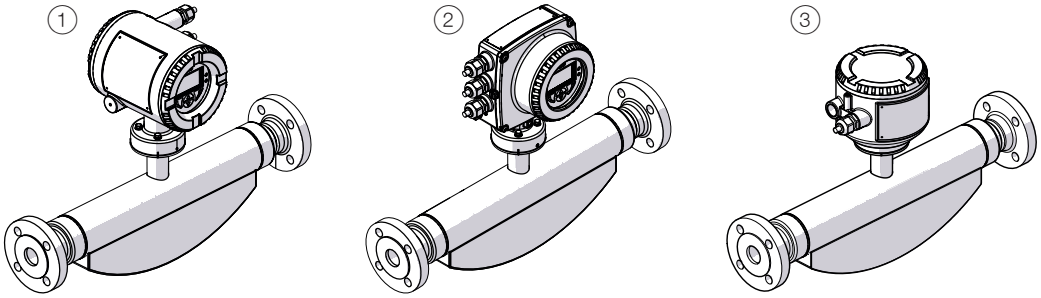

(1) Sensor (integral mount design, dual-compartment housing)
(2) Sensor (integral mount design, single-compartment housing)
(3) Sensor (remote mount design)

Figure 1: Designs

Sensor				
Model	FCB400 standard design		FCH400 hygienic design	
Housing	Integral mount design, remote mount design			
Measuring accuracy for liquids	**FCB430**	**FCB450**	**FCH430**	**FCH450**
Mass flow*	0.4 %, 0.25 % and 0.2 %	0.1 % and 0.15 %	0.4 %, 0.25 % and 0.2 %	0.1 % and 0.15 %
Volume flow*	0.4 %, 0.25 % and 0.2 %	0.15 % and 0.11 %	0.4 %, 0.25 % and 0.2 %	0.15 % and 0.11 %
Density	0.01 kg/l	• 0.002 kg/l • 0.001 kg/l (optional) • 0.0005 kg/l	0.01 kg/l	• 0.002 kg/l • 0.001 kg/l (optional) • 0.0005 kg/l
Temperature	1 K	0.5 K	1 K	0.5 K
Measuring accuracy for gases*	1 %	0.5 %	1 %	0.5 %
Approved measuring medium temperature T_{medium}	−50 to 160 °C (−58 to 320 °F):	−50 to 205 °C (−58 to 400 °F):	−50 to 160 °C (−58 to 320 °F):	−50 to 205 °C (−58 to 400 °F):
Process connection				
Flange DIN 2501 / EN 1092-1	DN 10 to 200; PN 40 to PN 160		–	
Flange ASME B16.5	DN ½ to 8 in.; CL150 to CL1500		–	
JIS flange	DN 10 to 200; JIS 10K to 20K		–	
Pipe fitting DIN 11851	DN 10 to 100 (⅜ to 4 in.)		DN 15 to 100 (½ to 4 in.)	
Pipe fitting SMS 1145	DN 25 to 80 (1 to 3 in.)		–	
Tri-clamp DIN 32676 (ISO 2852) Tri-clamp BPE	DN 15 to 100 (¼ to 4 in.) DN ⅜ to 4 in.		DN 20 to 100 (¼ to 4 in.) DN ⅜ to 4 in.	
Female thread DIN ISO 228 and ASME B 1.20.1	DN 15; PN 100		–	
Other connections	On request		On request	
Wetted material	Stainless steel 1.4435 or 1.4404 (AISI 316L), nickel-alloy C4 / C22 (optional)		Stainless steel, polished 1.4404 (AISI 316L) or 1.4435 (AISI 316L)	
IP rating	• Integral mount design: IP 65 / IP 67, NEMA 4X • Remote mount design: IP 65 / IP 67 / IP 68 (sensor only, immersion depth: 5 m), NEMA 4X			
Approvals				
• Explosion protection	ATEX / IECEx / cFMus		ATEX / IECEx / cFMus	
• Hygiene approvals	–		EHEDG, FDA compliant	
• Legal metrology	Type-tested for legal metrology in accordance with MID / OIML R117 or API / AGA			
• Further approvals	At www.abb.com/flow or on request.			

* Indication of accuracy in % of the measured value

... Overview – models

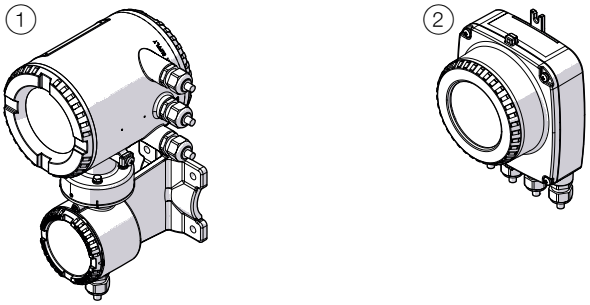

1 Dual-compartment housing

2 Single-compartment housing

Figure 2: Transmitter with remote mount design

Transmitter	
Housing	Integral mount design (see Figure 1, pos. 1 and 2), remote mount design.
IP rating	IP 65 / IP 67, NEMA 4X
Cable length	Maximum 200 m (656 ft), remote mount design only
Power supply	100 to 240 V AC, 50 / 60 Hz 11 to 30 V DC, nominal voltage: 24 V DC
Outputs in basic version	Current output: 4 to 20 mA active or passive Digital output 1: passive, configurable as pulse, frequency or switch output Digital output 2: passive, configurable as pulse or switch output
Additional optional outputs	The transmitter has two slots in which plug-in cards can be inserted to provide additional inputs and outputs. The following plug-in cards are available: • Current output (maximum two plug-in cards simultaneously) • Digital output (maximum one plug-in card) • Digital input (maximum one plug-in card) • Modbus or PROFIBUS DP interface (maximum of one plug-in card) • 24 V DC loop power supply for active outputs (maximum one plug-in card)
External output zero return	Yes
External totalizer reset	Yes
Forward / reverse flow metering	Yes
Counter	Yes
Communication	HART protocol 7.1 Modbus or Profibus DP (using plug-in card)
Empty pipe detection	Yes, via configurable density alarm
Self-monitoring and diagnosis	Yes
Local indicator	Yes
Field optimization for flow and density	Yes
Concentration measurement 'DensiMass'	Yes, optional on models FCB450 and FCH450
'FillMass' fill function	Yes, optional on models FCB450 and FCH450
'VeriMass' function	Yes, optional

General data

Device description

The CoriolisMaster FCB400, FCH400 is the cost-effective and easy to use ABB easymass flowmeter with a new modular transmitter.

The CoriolisMaster FCB400, FCH400 operates in accordance with the Coriolis principle. The design offers the following benefits:

- Space-saving, robust design.
- Variety of process connections.
- Modular, flexible output concept.

Transmitter with digital signal processor (DSP)

The transmitter for the CoriolisMaster FCB400, FCH400 incorporates a digital signal processor (DSP) that enables high-precision mass flow and density measurements to be taken. The Coriolis sensor signals are immediately converted into digital data without any intermediate analog steps.

Excellent long-term stability and reliability together with fast signal processing are achieved with the new DSP transmitter.

Self-diagnostic functions for the flowmeter sensor and the transmitter, in combination with absolute zero stability, are benefits you can count on to ensure accurate measurements are taken.

The CoriolisMaster FCB400, FCH400 transmitter is particularly well suited for use in the following cases:

- When mass flow need to be measured to the highest degree of accuracy,
- When the density of the measured medium is determined,
- When the components of a recipe are mixed together,
- When measuring non-conductive fluids or for example, highly viscous, solid-loaded liquids,
- in filling processes.

SIL-functional safety

Term	Value
DeviceType	CoriolisMaster FCB430, FCB450, FCH430, FCH450 with option 'CS'
Type of Assessment	Verification in accordance with IEC 61508 2, route 1S/1H
SIL capability	SIL2 (Low demand mode)
HFT	0
Component Type	B

Failure Rates		Design
	Integral mount design	Remote mount design
SFF	93.3 %	93.2 %
PFD_{AVG} after 1 year (MTTR 48 hours)	6,91E-04	7,28E-04
PFD_{AVG} after 2 years (MTTR 48 hours)	1,31E-03	1,38E-03
PFD_{AVG} after 4 years (MTTR 48 hours)	2,54E-03	2,68E-03
λ_S	435 FIT	435 FIT
λ_{Dd}	1529 FIT	1616 FIT
λ_{Du}	142 FIT	149 FIT

SAFETY INSTRUCTIONS
The listed failure rates λ_S, λ_{Dd}, λ_{Du} and PFD_{AVG} relate to the failure rates of the Siemens norm SN29500 at an average component temperature of 40 °C (104 °F).
This corresponds to an average ambient temperature of 30 °C (86 °F).

Devices for legal metrology in accordance with MID / OIML R117

The Coriolis mass flowmeters CoriolisMaster FCBx50 / FCHx50 are type-tested for legal metrology in accordance with MID / OIML R117 in accuracy class 0.3. Additional information can be found on the corresponding certificate. The certificate is available in the download area at www.abb.com/flow.
Please select the optional order code ‘CM1’ when ordering. Please observe the additional remarks in the operating and commissioning instruction.

Note
Use in accordance with API / AGA standards is also possible.

... General data

FillMass batch function

Only for FCB450 / FCH450

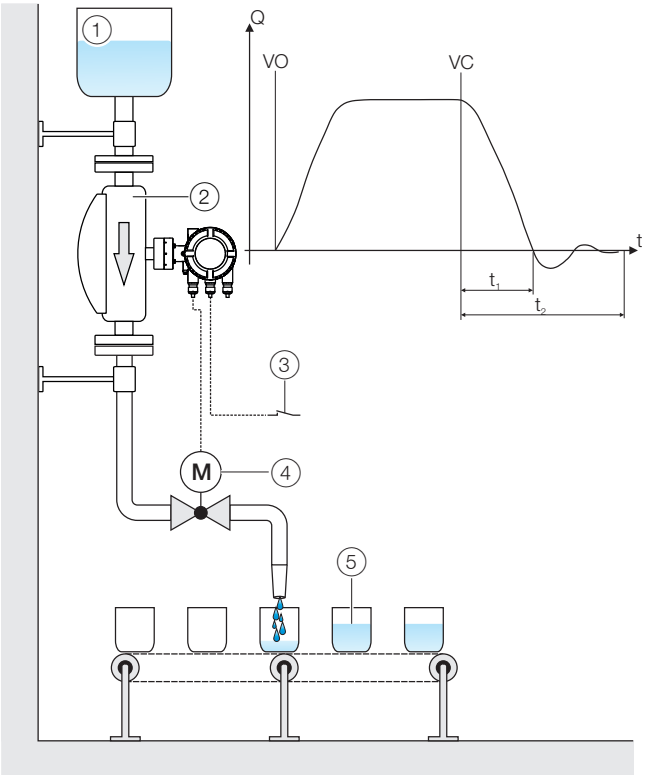

1. Supply tank
2. Sensor
3. Start / stop fill operation (digital input through plug-in card)
4. Fill valve
5. Filling tank

VO Valve open (filling started)
VC Valve closed (fill quantity reached)
t_1 Valve closing time
t_2 Overrun time

Figure 3: FillMass filling function

The integrated FillMass fill function allows filling processes with filling times of > 3 seconds.
For this purpose, the filling quantity is given via an adjustable totalizer.
The fill function is controlled via the HART interface or via the digital input.
The valve is triggered via one of the digital outputs and closed again once the preset filling quantity is reached.
The transmitter measures the overrun quantity and calculates the overrun correction from this.
Additionally, the low flow cut-off can be activated if required.

Concentration measurement DensiMass

Only for FCB450 / FCH450

The transmitter can calculate the current concentration from the measured density and temperature using concentration matrices.
The following concentration matrices are preconfigured in the transmitter as standard:

- Concentration of sodium hydroxide in water
- Concentration of alcohol in water
- Concentration of sugar in water
- Concentration of maize starch in water
- Concentration of wheat starch in water

In addition, the user can enter two user-defined matrices:

- Up to 100 values with one matrix
- Up to 50 values per matrix with two matrices

Calculating standard volumes and standard densities of liquids

If a suitable matrix is available, the DensiMass function also allows the measured volume to be corrected for any selected temperature.
The measured density can also be corrected for a given temperature.
However, this is only possible when measuring liquids and after entering an appropriate matrix.
This correction can also be performed using the default matrices (see above).
The calculated standard volumes and standard densities can also be issued for all other process variables.
The software ‘DensiMatrix’ is available for the easy input of the matrix.

Accuracy of the concentration measurement
The accuracy of the concentration measurement is determined in the first instance by the quality of the matrix data entered.
However, as the calculation is based on temperature and density (the input variables), the accuracy of the concentration measurement is ultimately determined by the measuring accuracy of the temperature and the density.

Example:
Density of 0 % alcohol in water at 20 °C (68 °F): 998.23 g/l
Density of 100 % alcohol in water at 20 °C (68 °F): 789.30 g/l

Concentration	Density
100 %	208.93 g/l
0.48 %	1 g/l
0.96 %	2 g/l
0.24 %	0.5 g/l

Thus, the accuracy class of the density measurement directly determines the accuracy of the concentration measurement.

VeriMass erosion monitor

The integrated diagnosis function VeriMass allows the status of the meter tube to be monitored. This enables changes due to material erosion and the formation of deposits on the meter tube walls to be identified at an early stage.
If the set limit value is exceeded, an alarm is triggered, for example via the programmable digital output or HART, depending on the configuration.
The limit value for the erosion monitor can be set either automatically or manually.

Automatic adjustment
The transmitter monitors the sensor's driver current over a prolonged period and creates a ‘fingerprint’ for the relevant application. The transmitter generates a corresponding tolerance value for deviations in the driver current.
The transmitter compares the behavior of the driver current with the generated fingerprint and triggers the relevant error message in the event of prolonged deviations.

Manual adjustment
For applications where automatic adjustment of the erosion monitor does not provide a satisfactory result, the erosion monitor can be adjusted manually.
For more information, please contact ABB Service or the sales organization.

Flowmeter sensor

General installation conditions

Installation location and assembly

Note the following points when selecting the installation location and when mounting the sensor:

- The ambient conditions (IP rating, ambient temperature range $T_{ambient}$) of the device must be adhered to at the installation location.
- Sensors and transmitters must not be exposed to direct sunlight. If necessary, provide a suitable means of sun protection on site. The limit values for ambient temperature $T_{ambient}$ must be adhered to.
- On flange devices, ensure that the counterflanges of the piping are aligned plane parallel. Only install flange devices with suitable gaskets.
- Prevent the sensor from coming into contact with other objects.
- The device is designed for industrial applications. No special EMC protective measures are required if the electromagnetic fields and interference at the installation location of the device comply with 'Best Practice' (in accordance with the standards listed in the declaration of conformity).
  Maintain a suitable distance from electromagnetic fields and interference that extend beyond the usual dimensions.

Seals

Users are responsible for selecting and mounting suitable gaskets (material, shape).
Note the following points when selecting and mounting gaskets:

- Use gaskets made from a material that is compatible with the measuring medium and measuring medium temperature.
- Gaskets must not extend into the flow area, since possible turbulence may influence the accuracy of the device.

Calculating pressure loss

Pressure loss is determined by the properties of the medium and the flow.
Documents to help with the calculation of pressure loss can be accessed from www.abb.com/flow-selector.

Brackets and supports

No special supports or damping are required for the device when the device is used and installed as intended.
In systems designed in accordance with 'Best Practice', the forces acting on the device are already sufficiently absorbed. This is also true of devices installed in series or in parallel.
For heavier devices, it is advisable to use additional supports / brackets on site. Doing this prevents damage to the process connections and piping from lateral forces.
Please observe the following points:

- Mount two supports or brackets symmetrically in the immediate vicinity of the process connections.
- Do not fasten any supports or brackets to the housing of the flowmeter sensor.

Inlet section

The sensor does not require any inlet section.
The devices can be installed directly before/after manifolds, valves or other equipment, provided that no cavitation is caused by this equipment.

Mounting position

The flowmeter operates in any mounting position.
Depending on the measuring medium (liquid or gas) and the measuring medium temperature, certain mounting positions are preferable to others.For this purpose, consider the following examples.
The preferred flow direction is indicated by the arrow on the sensor.The flow will be displayed as positive.
The specified measuring accuracy can be achieved only in the calibrated flow direction (for forward flow calibration, this is only in the direction of the arrow; for the optional forward flow and reverse flow calibration, this can be in both flow directions).

Liquid measuring media

Observe the following points to avoid measuring errors:

- The meter tubes must always be completely filled with the measuring medium.
- The gases dissolved in the measuring medium must not leak out. To safeguard this, a minimum back pressure of 0.2 bar (2.9 psi) is recommended.
- The minimum vapor pressure of the measuring medium must be maintained when there is negative pressure in the meter tube or when liquids are gently simmering.
- During operation, there must be no phase transitions in the measuring medium.

Vertical installation

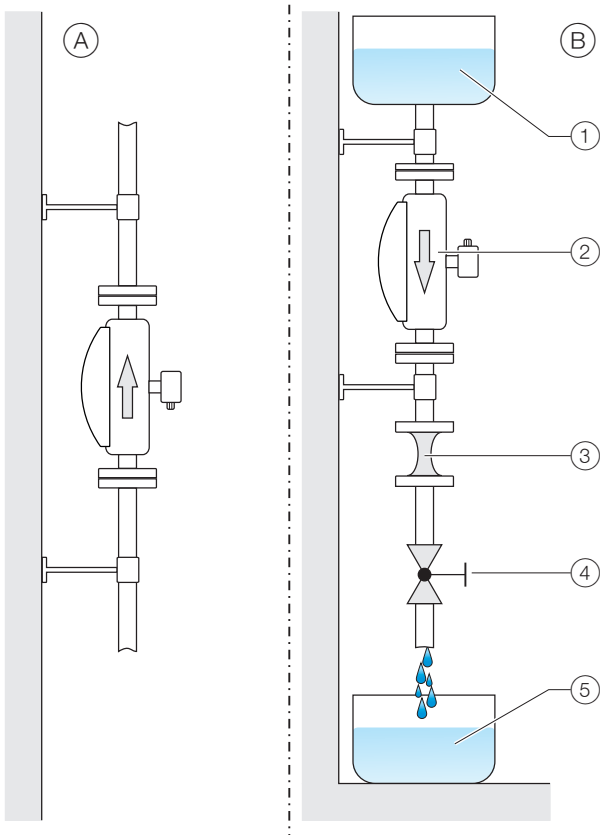

(1) Supply tank
(2) Sensor
(3) Piping constriction / orifice
(4) Turn-off device
(5) Filling tank

Figure 4: Vertical installation

(A) For vertical installation in a riser, no special measures are required.
(B) For vertical installation in a downpipe, a piping constriction or an orifice must be installed below the sensor. Doing this prevents the sensor from draining during the measurement.

Horizontal installation

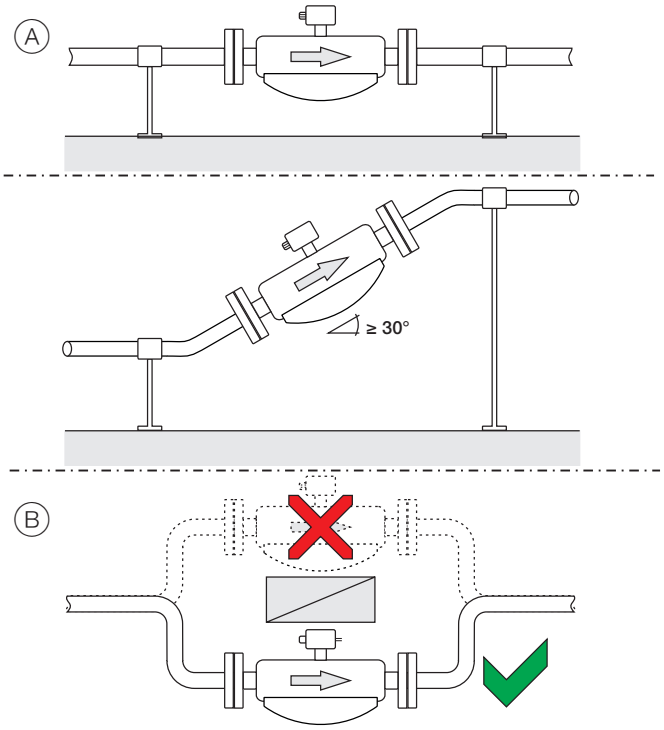

Figure 5: Horizontal installation

(A) For liquid measuring media and horizontal installation, the transmitter and terminal box must point upward. If a self-draining installation is required, the sensor must be mounted at an incline of ≥ 30°.
(B) Installing the sensor at the highest point of the piping leads to an increased number of measuring errors due to the accumulation of air or the formation of gas bubbles in the meter tube.

... Flowmeter sensor

Gaseous measuring media

Observe the following points to avoid measuring errors:

- Gases must be dry and free of liquids and condensates.
- Avoid the accumulation of liquids and the formation of condensate in the meter tube.
- During operation, there must be no phase transitions in the measuring medium.

If there is a risk of condensate formation when using gaseous measuring media, note the following:
Ensure that condensates cannot accumulate in front of the sensor.
If this cannot be avoided, we recommend that the sensor is installed vertically with a downward flow direction.

Vertical installation

For vertical installation, no special measures are required.

Horizontal installation

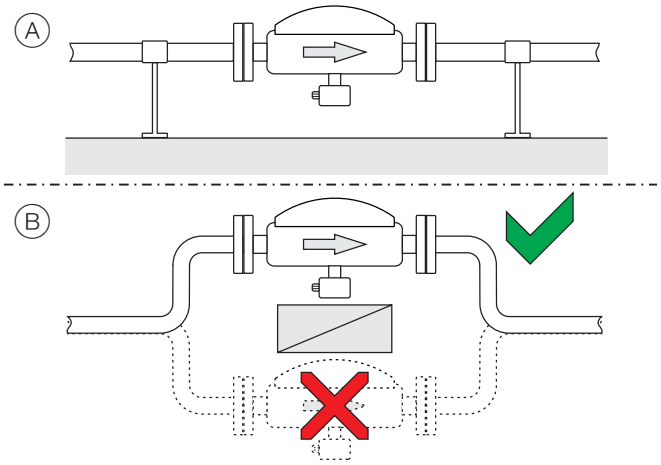

Figure 6: Horizontal installation

(A) For gaseous measuring media and horizontal installation, the transmitter and terminal box must point downward.
(B) Installing the sensor at the lowest point of the piping leads to an increased number of measuring errors due to the accumulation of liquid or the formation of condensates in the meter tube.

Sensor insulation

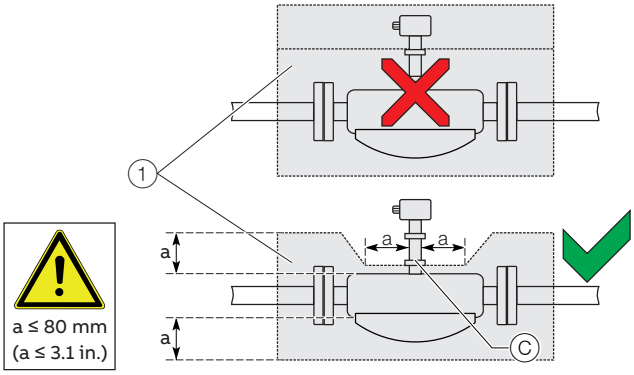

(1) Insulation

Figure 7: Installation at T_{medium} −50° to 205 °C (−58 to 400 °F)

The sensor may only be insulated in conjunction with the option TE1 'Extended tower length for sensor insulation' or TE2 'Extended tower length – insulation capacity with dual gasket,' as shown in Figure 7.

Heat tracing of the sensor

When operating the sensor in conjunction with heat tracing, the temperature at point (C) (Figure 7) 100 °C (212 °F) must not be exceeded at any time!

Turn-off devices for the zero point adjustment

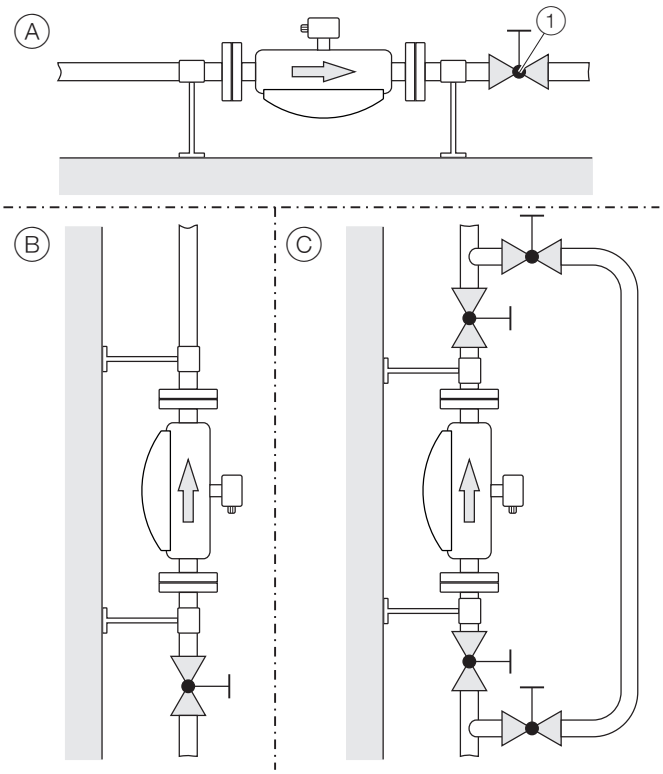

(1) Turn-off device

Figure 8: Mounting options for turn-off devices (example)

To guarantee the conditions for zero point balancing under operating conditions, turn-off devices are required in the piping:

(A) At least on the outlet side when the transmitter is mounted in horizontal position

(B) At least on the inlet side when the transmitter is mounted in vertical position.

(C) In order to perform balancing during an ongoing process, it is advisable to mount a bypass pipe.

Installation in EHEDG-compliant installations

- The required self-draining functionality of the sensor can only be guaranteed when the vertical mounting position or horizontal mounting position at a 30° incline is used. Refer to **Vertical installation** on page 9.
- The combination of process connections and gaskets selected by the operator may comprise only EHEDG-compliant components. Please note the information in the latest version of the EHEDG Position Paper: 'Hygienic Process connections to use with hygienic components and equipment' in this regard.
- The pipe fitting in accordance with DIN 11851 is approved for use in conjunction with an EHEDG-compliant gasket.

... Flowmeter sensor

Devices for legal metrology in accordance with MID / OIML R117

The Coriolis mass flowmeters CoriolisMaster FCBx50 / FCHx50 are type-tested for legal metrology in accordance with MID / OIML R117 in accuracy class 0.3. Additional information can be found on the corresponding certificate. The certificate is available in the download area at www.abb.com/flow.

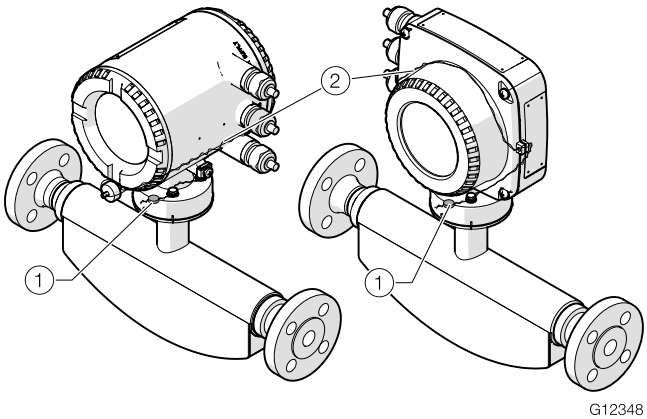

(1) Lead seal

(2) Lead seal wire

Figure 9: Sealing in accordance with MID / OIML R117 (example)

On devices for legal metrology in accordance with MID / OIML R117, the hardware write protection must be activated after commissioning.
This prevents a change in the parameterization of the devices.

To prevent deactivation of the hardware write protection or other manipulations during operation, the transmitter housing and the sensor housing connection box (with remote mount design) must be sealed.
For this purpose, a seal kit is available at ABB.
For the assembly of the seal, please observe the separate 'IN/FCX100/FCX400/MID/OIML-XA' instructions.

Designs

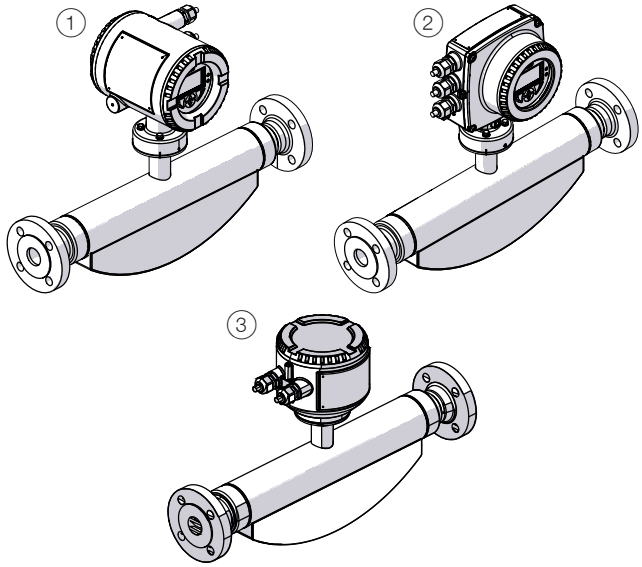

1 Integral mount design with dual-compartment transmitter housing
2 Integral mount design with single-compartment transmitter housing
3 Remote mount design (without transmitter)

Figure 10: Sensor FCB4xx / FCH4xx

Note
For additional information on dependencies and restrictions, and for help on product selection, please refer to the Online Product Selection Assistant (PSA) at www.abb.us/flow-selector.

Nominal diameter and measuring range

Nominal diameter	Q_{max} in kg/h (lb/h)
DN 15 (½ in.)	0 to 8,000 (0 to 17,637)
DN 25 (1 in.)	0 to 35,000 (0 to 77,162)
DN 50 (2 in.)	0 to 90,000 (0 to 198,416)
DN 80 (3 in.)	0 to 250,000 (0 to 551,156)
DN 100 (4 in.)	0 to 520,000 (0 to 1,146,404)
DN 150 (6 in.)	0 to 860,000 (0 to 1,895,975)

Recommended flow range
Fluids:

- The recommended flow range is 5 to 100 % of Q_{max}.
- Flow rates < 1 % of Q_{max} should be avoided.

Gases:

- The flow velocity of gases in the meter tube should not exceed 0.3 Mach [approx. 100 m/s (328 ft/s)].
- Increased deviation in repeatability should be expected from a flow velocity of approx. 80 m/s (262 ft/s).
- The maximum flow range of gases depends on the operating density. Dimensioning guidelines are available at www.abb.com/flow.

... Flowmeter sensor

Measuring accuracy

Reference conditions

Calibration fluid	Water • Temperature: 25 °C (77 °F) ± 5 K • Pressure: 2 to 4 bar (29 to 58 psi)
Ambient temperature	25 °C (77 °F) +10 K / −5 K
Power supply	Line voltage in accordance with name plate U_N ± 1 %
Warm-up phase	30 minutes
Installation	• Installation in accordance with **Assembly Notes** and **Mounting positions** • No visible gas phase • No external mechanical or hydraulic disturbances, particularly no cavitation
Output calibration	Pulse output

Measured error and repeatability

The measured error and repeatability are calculated as follows for the flow:

Scenario 1:
If

$$\text{Flow rate} \geq \frac{\text{Zero stability}}{(\text{base accuracy} / 100)}$$

Then:

- Maximum measured value error:
  ± base accuracy as % of measured value.
- Repeatability:
  ± ½ x base accuracy as % of measured value.

Scenario 2:
If

$$\text{Flow rate} < \frac{\text{Zero stability}}{(\text{base accuracy} / 100)}$$

Then:

- Maximum measured error:
  ± (zero point stability / measured value) x 100 % of measured value
- Repeatability:
  ± ½ x (zero point stability / measured value) x 100% of measured value.

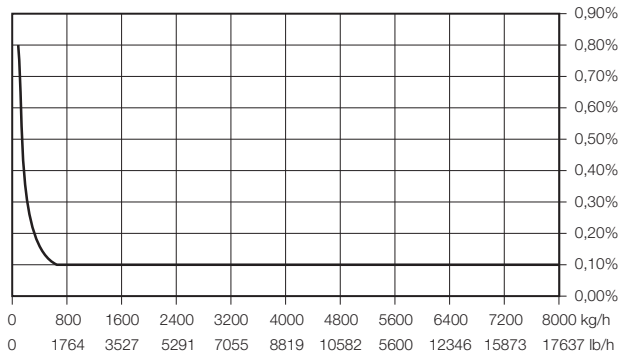

Figure 11: Measured error FCB450 DN 15 (Example)

FCx450			
Measurement dynamic	**Flow rate**	**Measured value error***	**Repeatability***
100:1	80 kg/h (176.4 lb/h)	≤ 0.8 %	0.4 %
50:1	160 kg/h (352.7 lb/h)	≤ 0.4 %	0.2 %
10:1	800 kg/h (1763.7 lb/h)	≤ 0.1 %	0.05 %
2:1	4000 kg/h (8818.5 lb/h)	≤ 0.1 %	0.05 %
1:1	8000 kg/h (17637 lb/h)	≤ 0.1 %	0.05 %

FCx450 – high accuracy			
Measurement dynamic	**Flow rate**	**Measured value error***	**Repeatability***
100:1	80 kg/h (176.4 lb/h)	≤ 0.5 %	0.25 %
50:1	160 kg/h (352.7 lb/h)	≤ 0.25 %	0.122 %
10:1	800 kg/h (1763.7 lb/h)	≤ 0.1 %	0.05 %
2:1	4000 kg/h (8818.5 lb/h)	≤ 0.1 %	0.05 %
1:1	8000 kg/h (17637 lb/h)	≤ 0.1 %	0.05 %

* Measured error and repeatability as % of measured value

Measured error and base accuracy for liquids			
	FCx430	**FCx450**	**FCx450 – high accuracy**
Order code flow calibration	A, B, E, J, K, N	C, D, L, M	D, M
Order code density calibration	1	3, 4	5
Mass flow*	± 0.4 % ± 0.25 % ± 0.2 %	± 0.15 % ± 0.1 %	± 0.1 %
Volume flow*	± 0.4 % ± 0.25 % ± 0.2 %	± 0.15 %	± 0.11 %
Density	0.010 kg/l**	0.002 kg/l** 0.001 kg/l**	0.0005 kg/l**
Repeatability for flow rate	Refer to **Measured error and repeatability** on page 14.		
Repeatability for density	0.002 kg/l**	0.002 kg/l** 0.001 kg/l**	0.00025 kg/l**
Temperature	1 K	0.5 K	0.2 K

Measured error and base accuracy for gases			
	FCx430	**FCx450**	**FCx450 – high accuracy**
Order code flow calibration	A, B, E, J, K, N	C, D, L, M	D, M
Order code density calibration	1	3, 4	5
Mass flow*	± 1 %	± 0.5 %	± 0.5 %
Temperature	1 K	0.5 K	0.2 K

* Measured error and base accuracy as % of measured value

** For the density range from 0.5 to 1.8 kg/dm³

Zero stability

Nominal diameter	FCx430	FCx450	FCx450 – high accuracy
Order code flow calibration	A, B, E, J, K, N	C, D, L, M	D, M
Order code density calibration	1	3, 4	5
DN 15 (½ in.)	0.64 kg/h (1.41 lb/h)		0.4 kg/h (0.88 lb/h)
DN 25 (1 in.)	2.16 kg/h (4.76 lb/h)		1.35 kg/h (2.98 lb/h)
DN 50 (2 in.)	7.20 kg/h (15.87 lb/h)		4.5 kg/h (9.92 lb/h)
DN 80 (3 in.)	20 kg/h (44 lb/h)		20 kg/h (44 lb/h)
DN 100 (4 in.)	41.6 kg/h (91.7 lb/h)		41.6 kg/h (91.7 lb/h)
DN 150 (6 in.)	68.8 kg/h (151.68 lb/h)		68.8 kg/h (151.68 lb/h)

Effect of the medium temperature

	FCx430	FCx450	FCx450 – high accuracy
Order code flow calibration	A, B, E, J, K, N	C, D, L, M	D, M
Order code density calibration	1	3, 4	5
On flow rate	less than ± 0.0015 % of Q_{max} / 1 K		less than ± 0.0004 % of Q_{max} / 1 K
On density	less than 0.0001 kg/dm³ per 1 K		less than 0.0001 kg/dm³ per 1 K

Effect of the operating pressure

Nominal diameter	Flow*	Density [kg/dm³ / bar]
DN 15 (½ in.)	-0.002 %	No effect
DN 25 (1 in.)	-0.013 %	0.00035
DN 50 (2 in.)	-0.010 %	0.00027
DN 80 (3 in.)	-0.006 %	0.00019
DN 100 (4 in.)	-0.009 %	0.00024
DN 150 (6 in.)	-0.035 %	0.00045

* Influence of operating pressure as % of measured value per bar

... Flowmeter sensor

Specifications

Pressure drop

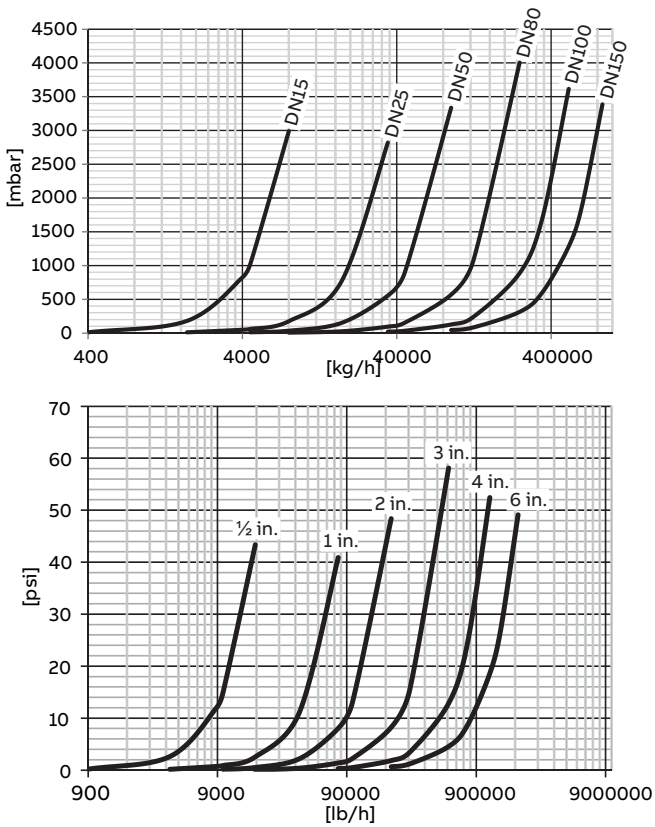

Figure 12: Pressure loss curve (measured with water, viscosity: 1 mPas)

Viscosity range

For dynamic viscosities ≥ 1 Pas (1000 mPas = 1000 cP), please consult ABB.

Temperature limits °C (°F)

Note

When using the device in potentially explosive atmospheres, note the additional temperature data in **Temperature data** on page 81!

Measuring medium temperature T_{medium}

- FCx430: −50 to 160 °C (−58 to 320 °F)
- FCx450: −50 to 205 °C (−58 to 401 °F)

In devices with order code 'Extended tower length – TE3', the measuring medium temperature must be limited to a maximum of 140 °C (284 °F) from an ambient temperature of ≥ 65 °C (149 °F).

Ambient temperature $T_{amb.}$

- Standard: −20 to 70 °C (−4 to 158 °F)
- Optional: −40 to 70 °C (−40 to 158 °F)

Process connections

For an overview of available process connection versions, see **Overview – models** on page 3.

Pressure rating

The maximum permissible operating pressure is determined by the respective process connection, the temperature of the medium to be measured, the screws, and the gasket material. For an overview of available pressure ratings, see **Overview – models** on page 3.

Enclosure as protective device (optional)

Order code PR5

- Maximum burst pressure 60 bar (870 psi)

Optional order code PR6 and PR7 on request

- Increased burst pressures up to 100 bar (1450 psi), possible for nominal diameters DN 15 to 100 (½ to 4 in.).
- Increased burst pressures up to 150 bar (2175 psi), possible for nominal diameters DN 15 to 80 (½ to 3 in.).
- Purge connections are available on request.

Pressure Equipment Directive

Conformity assessment according to Category III, fluid group 1, gas

Note the corrosion resistance of the meter tube materials in relation to the measuring medium.

Installation lengths in accordance with NAMUR standards

The CoriolisMaster FCB400, FCH400 is the ideal device for use in accordance with NAMUR standards.
While also conforming to other standards, the device can be ordered with installation lengths in accordance with NAMUR standards.
The exact lengths can be found in the tables in **Devices DN 15 to 150 in NAMUR standard installation lengths (order option S5, S7)** on page 29 (for integral mount design) and **Devices DN 15 to 150 in NAMUR standard installation lengths (order option S5, S7)** on page 43 (for remote mount design).

Meter tube inside diameter

Inside diameter of the meter tube of the Coriolis mass flowmeter CoriolisMaster FCB400, FCH400.

Nominal diameter	Meter tube inside diameter
DN 15 (½ in.)	2 x 8 mm (2 x 0.31 in.)
DN 25 (1 in.)	2 x 16 mm (2 x 0.63 in.)
DN 50 (2 in.)	2 x 23.7 mm (2 x 0.93 in.)
DN 80 (3 in.)	2 x 36.62 mm (2 x 1.44 in.)
DN 100 (4 in.)	2 x 52.51 mm (2 x 2.07 in.)
DN 150 (6 in.)	2 x 68.9 mm (2 x 2.71 in.)

IP rating

In accordance with EN60529: IP 65 / IP 67, NEMA 4X

Note

The sensor in remote mount design is approved for an immersion depth up to 5 m (16.4 ft) in accordance with IP rating IP 68.

Materials for the transmitter terminal box

Integral mount design	
Material	Cast aluminum or stainless steel 1.4409 (ASTM CF3M)
Paint	Paint coat ≥ 80 µm thick, RAL 9002 (light gray)
Cable gland**	Polyamide or stainless steel*

Remote mount design	
Material	Cast aluminum
Paint	Mid-section: Paint coat ≥ 80 µm thick, RAL 7012 (basalt gray) Front cover / rear cover: RAL 9002 (light gray)
Cable gland**	Polyamide

* In the case of explosion-proof design for −40 °C (−40 °F) ambient temperature)

** Cable gland with M20 x 1.5 or NPT thread, to be selected via the order number.

Materials for the sensor

Wetted components	
FCB400	**FCH400**
Stainless steel 1.4435 or 1.4404 (AISI 316L)	Stainless steel 1.4435 or 1.4404 (AISI 316L)
C4* nickel alloy (2.4610) or C22 nickel alloy (2.4602)	–
Optional: Manufacture in accordance with NACE MR0175 and MR0103 (ISO 15156)	

Sensor housing**
Stainless steel 1.4404 (AISI 316L), 1.4301 (AISI 304), 1.4308 (ASTM CF8)

* Hastelloy C is a registered trademark of Haynes International. C4 and C22 nickel alloys are equivalent to Hastelloy C4 and Hastelloy C22.

** If the wetted parts of the sensor are made from nickel alloy then parts of the sensor housing (splitter) are also manufactured from nickel alloy. However, the prevailing parts remain manufactured from the specified material.

Roughness for flanges in accordance with EN 1092-1

	EN 1092-1 B1	EN 1092-1 B2
Pressure rating	≤ PN 40	≥ PN 63
Mean roughness value Ra	3.2 to 12.5 µm	0.8 to 3.2 µm
Roughness depth Rz	12.5 to 50.0 µm	3.2 to 12.5 µm

... Flowmeter sensor

Material load for process connections

Note

The availability of the various process connections appears in the online Product Selection Assistant (PSA) at www.abb.us/flow-selector.

- Not all connections shown here are available in all the devices and designs.
- The permissible material load of the device can additionally differ from the material load of the connection. The permissible limit values (pressure rating / measuring medium temperature T_{medium}) can be found on the name plate.

Design	Nominal diameter	PS_{max}	TS_{max}	TS_{min}
Pipe fitting (DIN 11851)	DN 15 to DN 40 (½ to 1 ½ in.)	40 bar (290 psi) (580 psi)	140 °C (284 °F)	−40 °C (−40 °F)
	DN 50 to DN 100 (2 to 4 in.)	25 bar (290 psi) (363 psi)	140 °C (284 °F)	−40 °C (−40 °F)
Pipe fitting (SMS 1145)	DN 25 to DN 80 (1 to 3 in.)	6 bar (290 psi) (87 psi)	140 °C (284 °F)	−40 °C (−40 °F)
Tri-Clamp (DIN 32676)	DN 15 to DN 50 (½ to 2 in.)	16 bar (290 psi) (232 psi)	120 °C (248 °F)	−40 °C (−40 °F)
	DN 65 to DN 100 (2 ½ to 4 in.)	10 bar (290 psi) (145 psi)	120 °C (248 °F)	−40 °C (−40 °F)
ASME BPE Clamp	< DN 80 (< 3 in.)	17.1 bar (290 psi) (248 psi)	121 °C (249.8 °F)	−40 °C (−40 °F)
	DN 80 (< 3 in.)	15.5 bar (290 psi) (224.8 psi)	121 °C (249.8 °F)	−40 °C (−40 °F)
	DN 100 (< 4 in.)	12.9 bar (290 psi) (187.1 psi)	121 °C (249.8 °F)	−40 °C (c40 °F)

Material load curves for flange devices

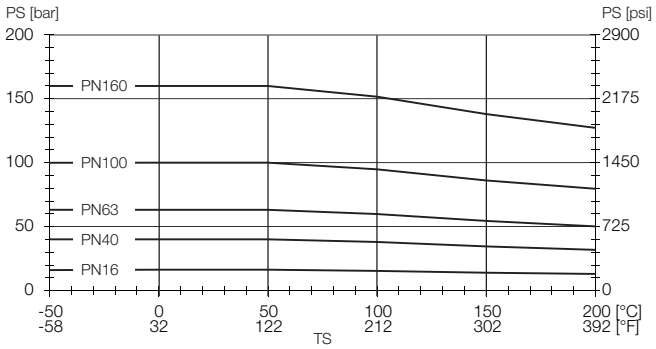

Figure 13: Stainless steel DIN flange 1.4571 / 1.4404 (316Ti / 316L) up to DN 200 (8 in.)

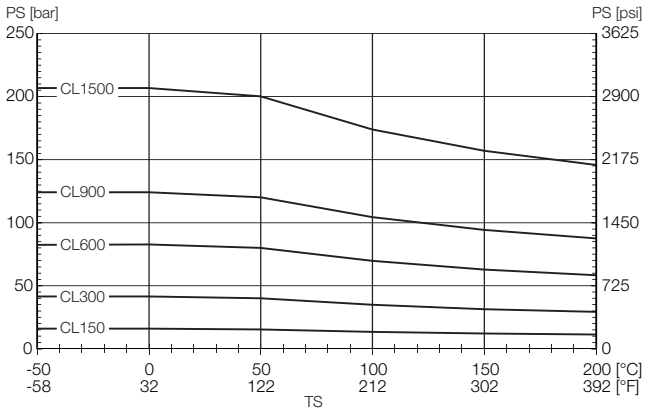

Figure 14: Stainless steel ASME flange 1.4571 / 1.4404 (316Ti / 316L) up to DN 200 (8 in.)

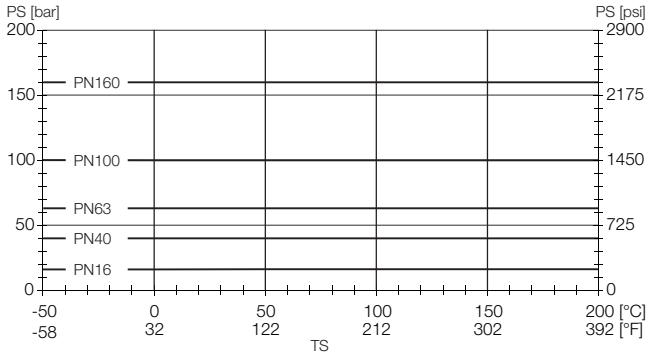

Figure 15: Nickel alloy DIN flange C4 (2.4610) or nickel alloy C22 (2.4602) up to DN 200 (8 in.)

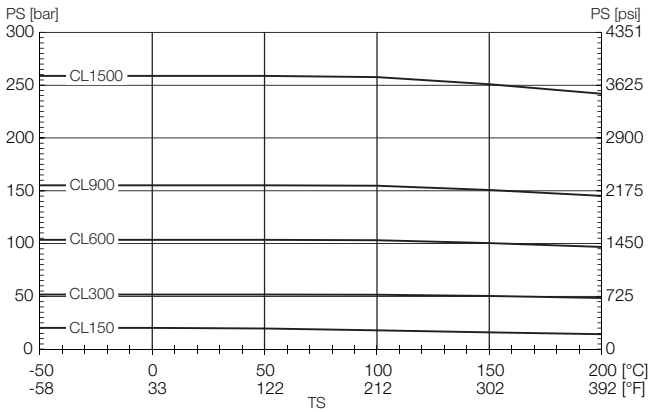

Figure 16: Nickel alloy ASME flange C4 (2.4610) or nickel alloy C22 (2.4602) up to DN 200 (8 in.)

Dimensions for devices with integral mount design

Devices with single-compartment transmitter housing

In integral mount design devices, the height (E / E1) and the dimensions provided in Figure 17 differ from the dimensions of the devices with dual-compartment transmitter housings.

- To the height (E / E1), 13 mm (0.51 in.) must be added.
- All other dimensions and the weight are unchanged.

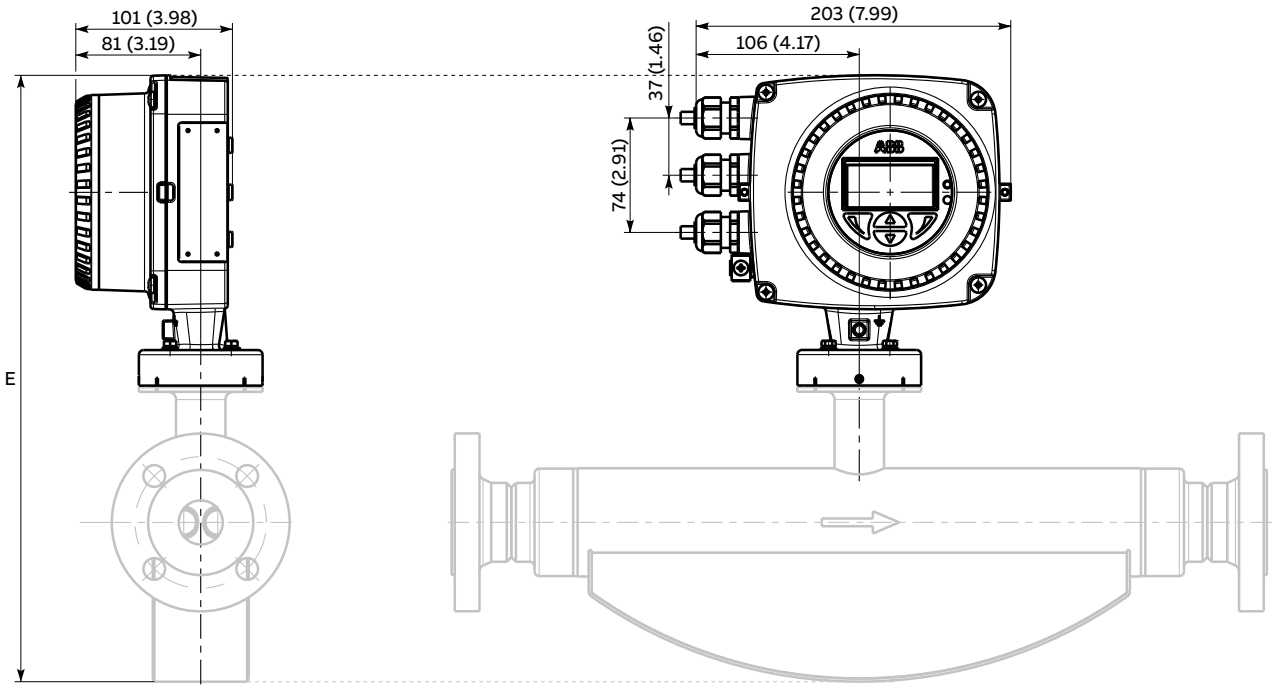

Figure 17: Integral mount design with single-compartment transmitter housing

... Flowmeter sensor

Devices with meter tube nominal diameter DN 15 to 50 and flange DN 10 to 65

Sensor with wetted parts made from stainless steel. All specified dimensions and weights are in mm (in.) or kg (lb).

Standard Version

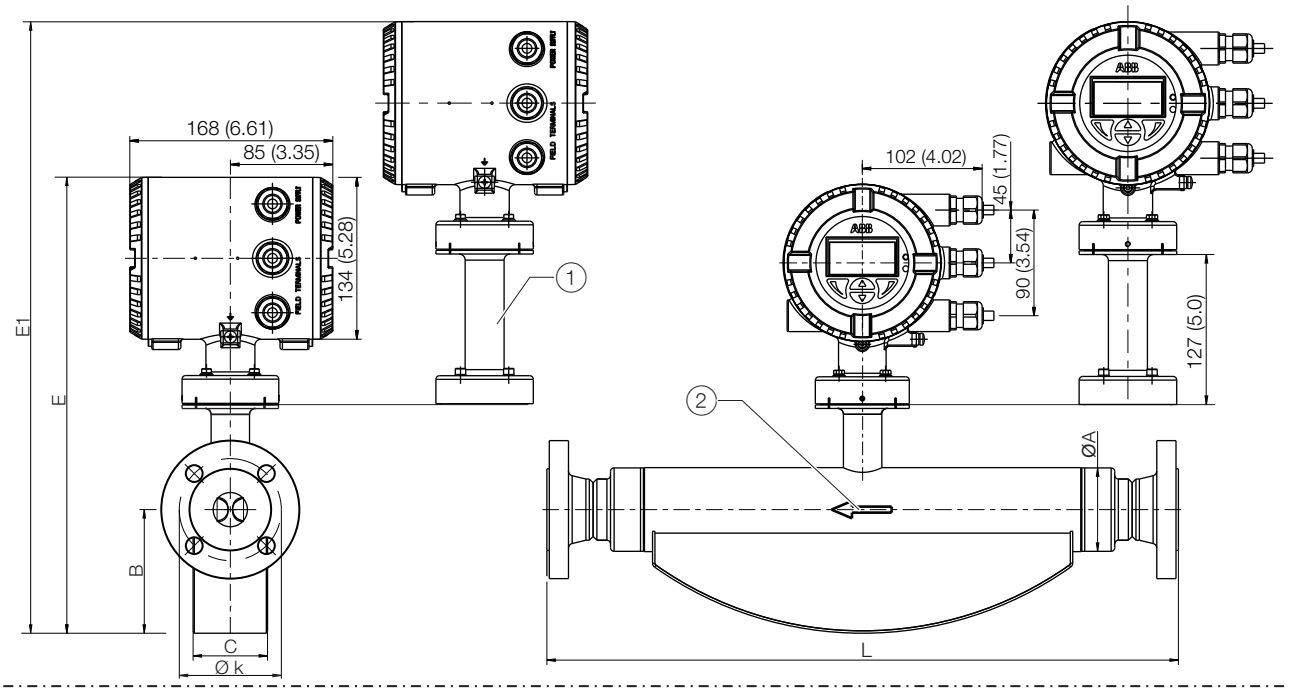

Marine version – CL1

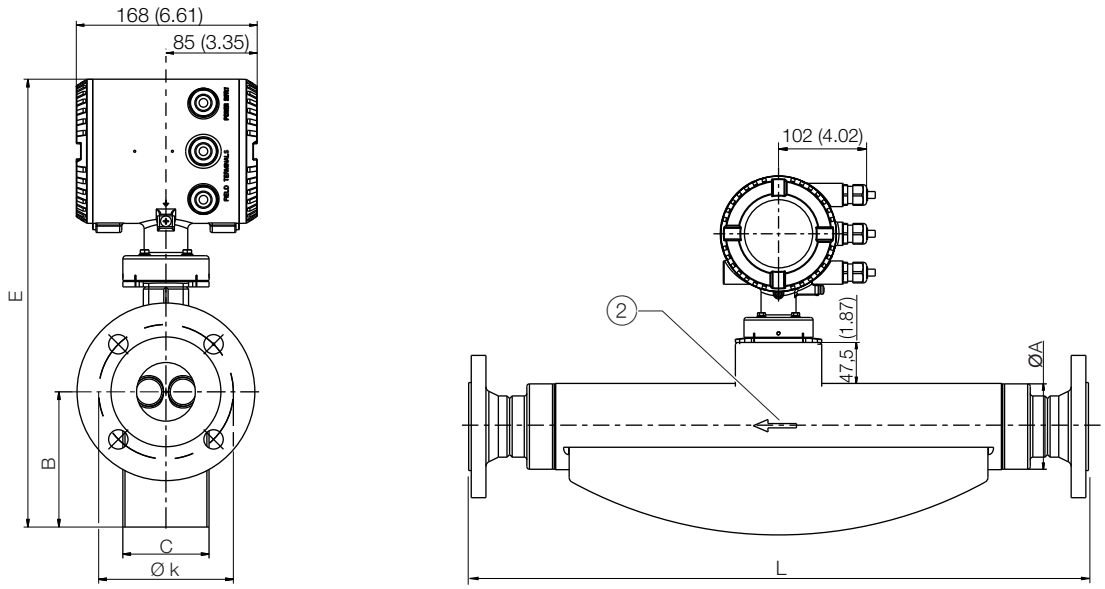

(1) 'Extended tower length – TE1, TE2' option or 'Pressure rating of sensor secondary housing – PR5, PR6, PR7' option

(2) Flow direction

Figure 1: Integral mount design with dual-compartment transmitter housing

Meter tube nominal diameter DN 15 (½ in.)									
DN / process connection		**L**	**Ø k**	**Ø A**	**B**	**C**	**E**	**E1***	**Weight max.**
10 (⅜)	PN 40 (EN 1092-1 B1)	385 (15.2)	60 (2.4)	44.5 (1.8)	80 (3.2)	49 (1.9)	345 (13.58)	472 (18.58)	13 (28.7))
	JIS 10K	385 (15.2)	65 (2.6)						
15 (½)	PN 40 (EN 1092-1 B1)	385 (15.2)	65 (2.6)						
	PN 63 (EN 1092-1 B2) PN 100 (EN 1092-1 B2)	403 (15.9)	75 (3.0)						
	CL150 (ASME B16.5)	435 (17.13)	60.5 (2.4)						
	CL300 (ASME B16.5) CL600 (ASME B16.5)	421 (16.6)	66.5 (2.6)						
	CL900 (ASME B16.5) CL1500 (ASME B16.5)		82.6 (3.3)						
	JIS 10K	385 (15.2)	70 (2.8)						
20 (¾)	PN 40 (EN 1092-1 B1)	421 (16.6)	75 (3.0)						
	CL150 (ASME B16.5)	421 (16.6)	69.9 (2.8)						
	JIS 10K	421 (16.6)	75 (3.0)						

* Standard version: devices with 'extended tower length – TE1, TE2' option or 'pressure rating of sensor secondary housing' option.

Tolerance for dimension L: +0 / −3 mm (+0 / −0.018 in.)

Meter tube nominal diameter DN 25 (1 in.)									
DN / process connection		**L**	**Ø k**	**Ø A**	**B**	**C**	**E**	**E1***	**Weight max.**
20 (¾)	PN 40 (EN 1092-1 B1)	576 (22.7)	75 (3.0)	69.5 (2.74)	103 (4.06)	62 (2.44)	386 (15.2)	513 (20.20)	15 (33.1)
	CL150 (ASME B16.5)	575 (22.6)	69.9 (2.8)						
	JIS 10K	576 (22.7)	75 (3.0)						
25 (1)	PN 40 (EN 1092-1 B1)	525 (20.7)	85 (3.3)						
	PN 63 (EN 1092-1 B2) PN 100 (EN 1092-1 B2)	564 (22.2)	100 (3.9)						
	CL150 (ASME B16.5)	575 (22.6)	79.2 (3.1)						
	CL300 (ASME B16.5) CL600 (ASME B16.5)	576 (22.7)	88.9 (3.5)						
	CL900 (ASME B16.5) CL1500 (ASME B16.5)	576 (22.7)	101.6 (4.0)						
	JIS 10K	525 (20.7)	90 (3.54)						
40 (1 ½)	PN 40 (EN 1092-1 B1)	576 (22.7)	110 (4.33)						
	PN 63 (EN 1092-1 B2) PN 100 (EN 1092-1 B2)	572 (22.5)	125 (4.92)						
	CL150 (ASME B16.5)	576 (22.7)	98.6 (3.88)						
	CL300 (ASME B16.5) CL600 (ASME B16.5)	576 (22.7)	114.3 (45.0)						
	JIS 10K	576 (22.7)	105 (4.13)						

* Standard version: devices with 'extended tower length – TE1, TE2' option or 'pressure rating of sensor secondary housing' option.

Tolerance for dimension L: +0 / −3 mm (+0 / −0.018 in.)

... Flowmeter sensor

Meter tube nominal diameter DN 50 (2 in.)									
DN / process connection		**L**	**Ø k**	**Ø A**	**B**	**C**	**E**	**E1***	**Weight max.**
40 (1 ½)	PN 40 (EN 1092-1 B1)	763 (30)	110 (4.33)	99 (3.9)	126 (4.96)	80 (3.15)	416 (16.38)	543 (21.38)	31 (68.3)
	PN 63 (EN 1092-1 B2)	745 (29.33)	125 (4.92)						
	PN 100 (EN 1092-1 B2)								
	CL150 (ASME B16.5)	763 (30)	98.6 (3.88)						
	CL300 (ASME B16.5)	756 (29.76)	114.3 (4.5)						
	CL600 (ASME B16.5)								
	CL900 (ASME B16.5)	780 (30.71)	124 (4.88)						
	CL1500 (ASME B16.5)								
	JIS 10K	763 (30)	105 (4.13)						
50 (2)	PN 40 (EN 1092-1 B1)	715 (28.15)	125 (4.92)						
	PN 63 (EN 1092-1 B2)	745 (29.33)	135 (5.31)						
	PN 100 (EN 1092-1 B2)	745 (29.33)	145 (5.71)						
	CL150 (ASME B16.5)	715 (28.15)	120.7 (4.75)						
	CL300 (ASME B16.5)	763 (30)	127 (5.0)						
	CL600 (ASME B16.5)	773 (30.43)	127 (5.0)						
	CL900 (ASME B16.5)	790 (31.1)	165.1 (6.5)						
	CL1500 (ASME B16.5)								
	JIS 10K	715 (28.15)	120 (4.72)						
65 (2 ½)	PN 40 (EN 1092-1 B1)	763 (30)	145 (5.71)						
	CL150 (ASME B16.5)	756 (29.76)	139.7 (5.5)						
	CL900 (ASME B16.5)	800 (31.5)	190.5 (7.5)						
	CL1500 (ASME B16.5)								
	JIS 10K	763 (30)	140 (5.51)						

* Standard version: devices with 'extended tower length – TE1, TE2' option or 'pressure rating of sensor secondary housing' option.

Tolerance for dimension L: +0 / −3 mm (+0 / −0.018 in.)

Devices with meter tube nominal diameter DN 80 and flange DN 65 to 100

Sensor with wetted parts made from stainless steel. All specified dimensions and weights are in mm (in.) or kg (lb).

Standard Version

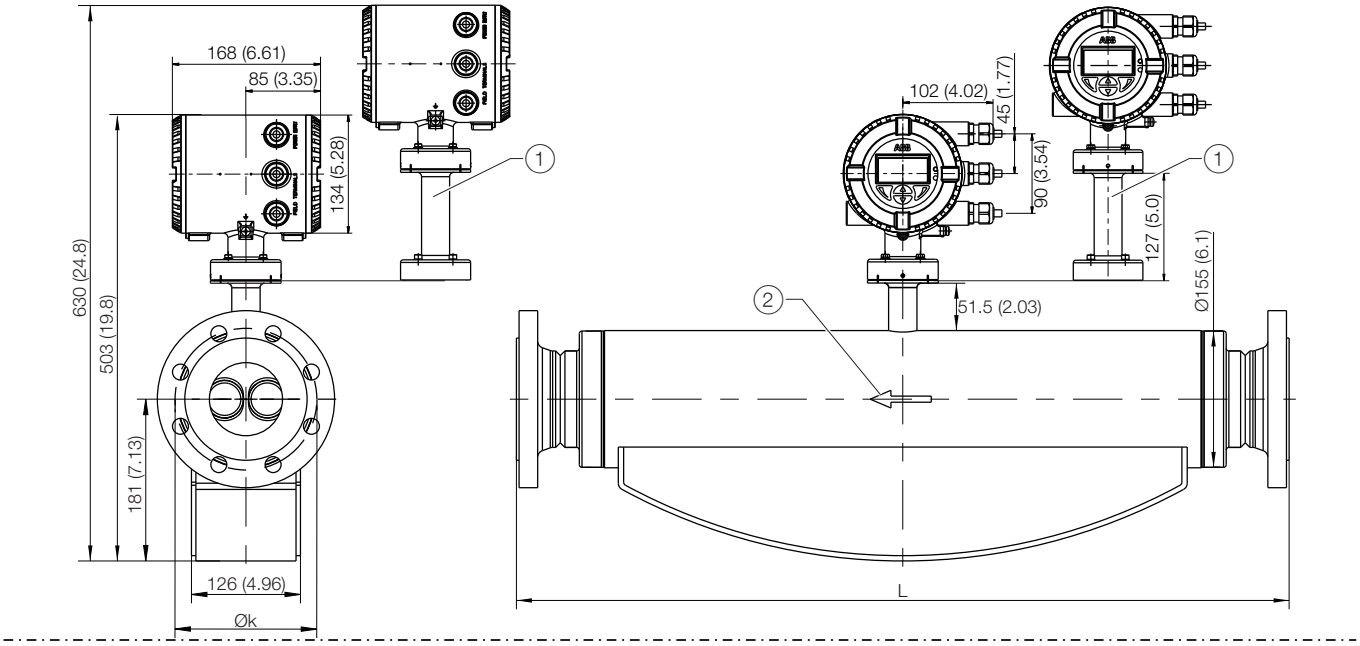

Marine version – CL1

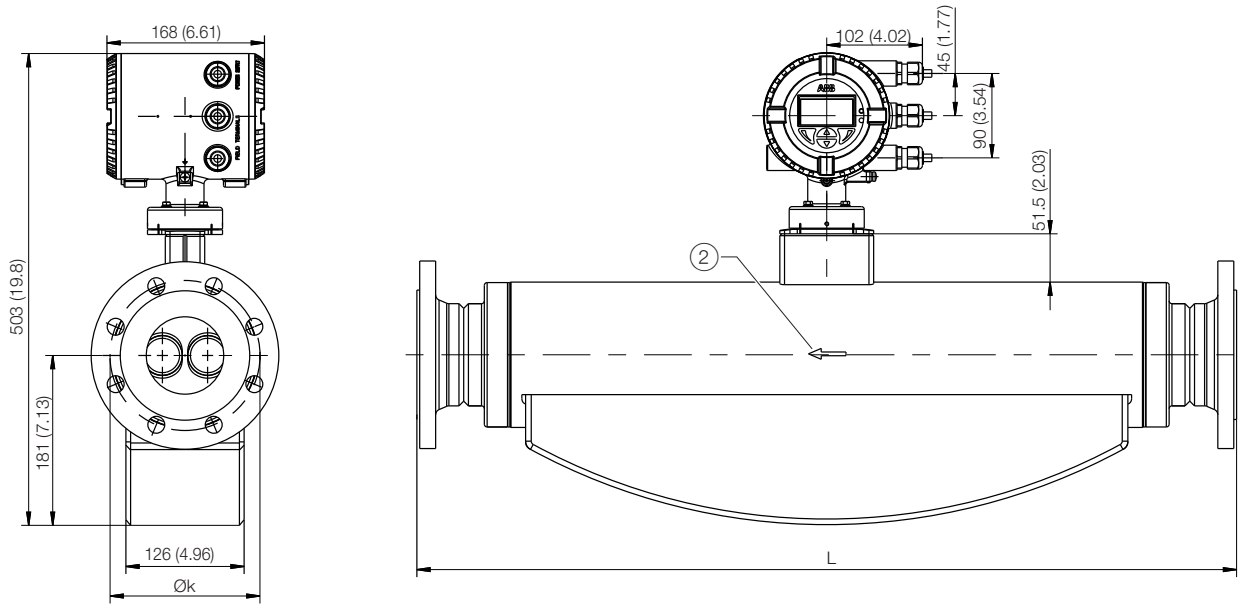

(1) 'Extended tower length – TE1, TE2' option or 'Pressure rating of sensor secondary housing – PR5, PR6, PR7' option

(2) Flow direction

Figure 2: Integral mount design with dual-compartment transmitter housing

... Flowmeter sensor

Meter tube nominal diameter DN 80 (3 in.)				
DN / process connection		**L**	**Ø k**	**Weight max.**
65 (2 ½ in.)	PN 16 (EN 1092-1 B1)	–*	–*	–*
	PN 40 (EN 1092-1 B1)	910 (35.83)	145 (5.71)	74 (163.1)
	PN 63 (EN 1092-1 B2)		160 (6.30)	78 (172.0)
	PN 100 (EN 1092-1 B2)		170 (6.69)	82 (180.8)
	CL150 (ASME B16.5)	–*	–*	–*
	CL300 (ASME B16.5)	920 (36.22)	149.4 (5.88)	76 (167.6)
	CL600 (ASME B16.5)			77 (169.8)
	CL900 (ASME B16.5)	965 (37.99)	190.5 (7.50)	94 (207.23)
	CL1500 (ASME B16.5)			
	JIS 10K	910 (35.83)	140 (5.5)	74 (163.1)
80 (3 in.)	PN 16 (EN 1092-1 B1)	870 (34.25)	160 (6.30)	74 (163.1)
	PN 40 (EN 1092-1 B1)			75 (165.4)
	PN 63 (EN 1092-1 B2)	910 (35.83)	170 (6.69)	79 (174.2)
	PN 100 (EN 1092-1 B2)		180 (7.09)	85 (187.4)
	CL150 (ASME B16.5)	880 (34.65)	152.4 (6.00)	75 (165.4)
	CL300 (ASME B16.5)	895 (35.24)	168.1 (6.62)	79 (174.2)
	CL600 (ASME B16.5)	920 (36.22)		82 (180.8)
	CL900 (ASME B16.5)	1100 (43.31)	190.5 (7.50)	94 (207.23)
	CL1500 (ASME B16.5)	1300 (51.18)	203.2 (8.00)	106 (233.7)
	JIS 10K	870 (34.25)	150 (5.91)	75 (165.4)
100 (4 in.)	PN 16 (EN 1092-1 B1)	875 (34.45)	180 (7.09)	75 (165.3)
	PN 40 (EN 1092-1 B1)		190 (7.48)	77 (170)
	PN 63 (EN 1092-1 B2)	1060 (41.73)	200 (7.87)	86 (189.6)
	PN 100 (EN 1092-1 B2)	1080 (42.52)	210 (8.27)	94 (207.23)
	CL150 (ASME B16.5)	880 (34.65)	190.5 (7.50)	77 (169.8)
	CL300 (ASME B16.5)	1075 (42.32)	200.2 (7.88)	91 (200.6)
	CL600 (ASME B16.5)	1100 (43.31)	215.9 (8.50)	101 (222.7)
	CL900 (ASME B16.5)	1130 (44.49)	234.9 (9.25)	111 (244.7)
	CL1500 (ASME B16.5)	1150 (45.28)	241.3 (9.50)	126 (277.8)
	JIS 10K	1060 (41.73)	175 (6.86)	85 (187.4)

* On request

Tolerance for dimension L: +0 / −3 mm (+0 / −0.018 in.)

Devices with meter tube nominal diameter DN 100 and flange DN 80 to 150

Sensor with wetted parts made from stainless steel. All specified dimensions and weights are in mm (in.) or kg (lb).

Standard Version

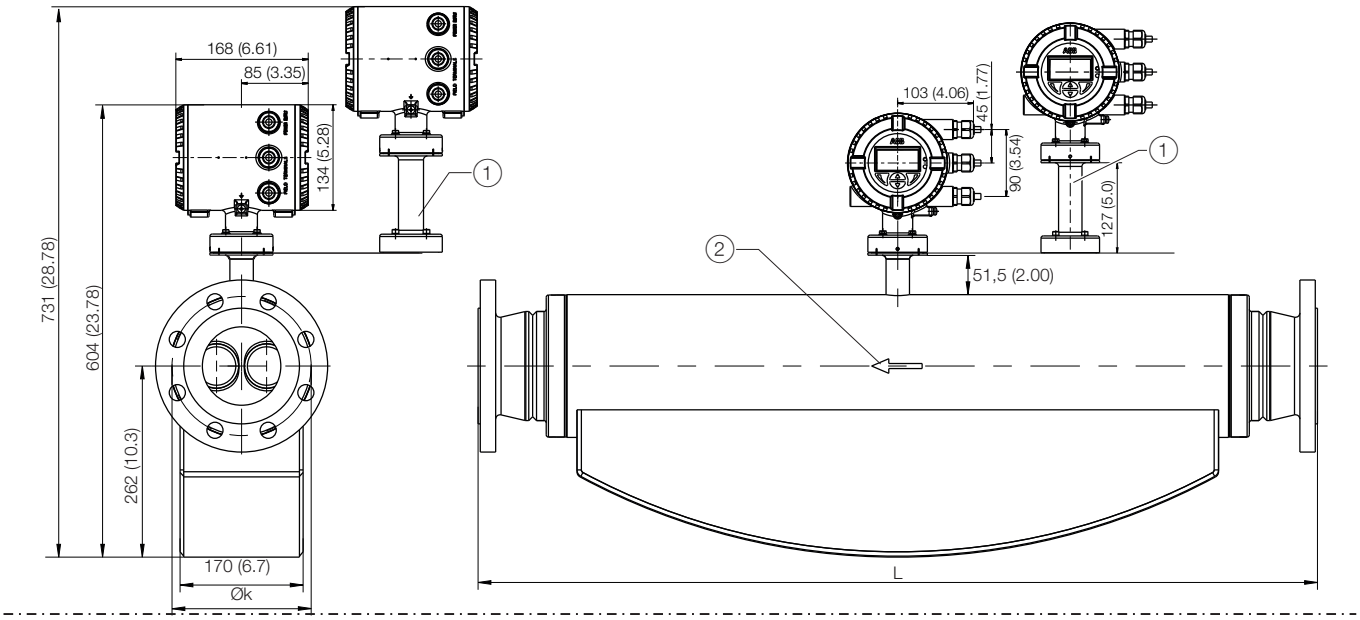

Marine version – CL1

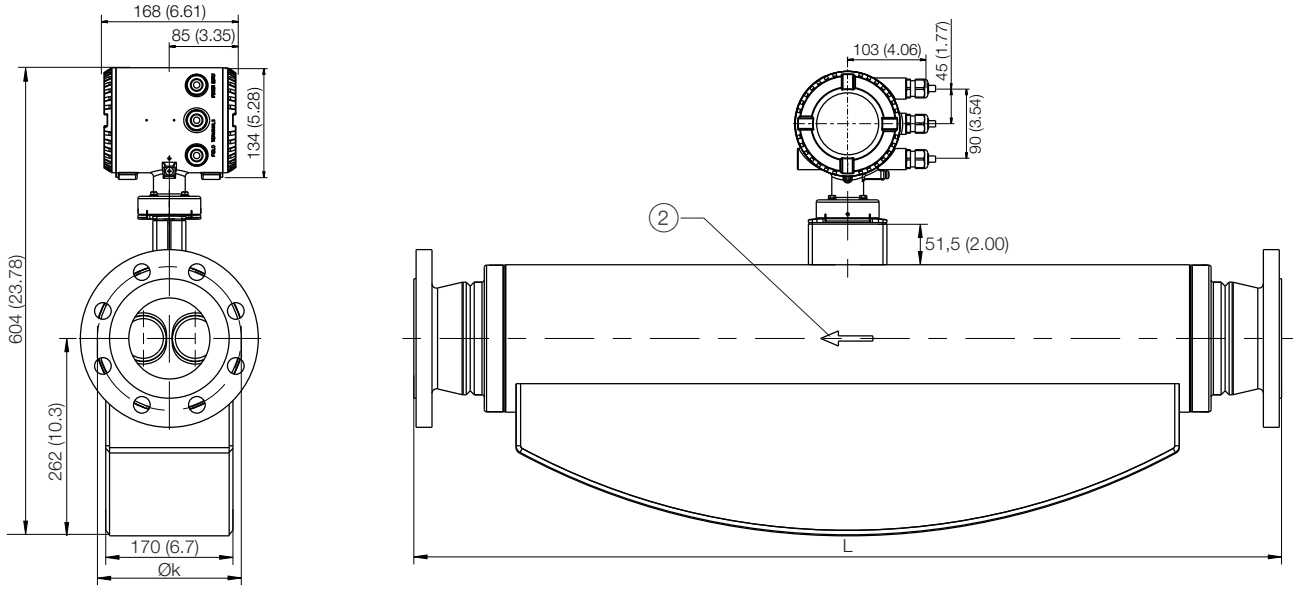

(1) 'Extended tower length – TE1, TE2' option or 'Pressure rating of sensor secondary housing – PR5, PR6, PR7' option

(2) Flow direction

Figure 3: Integral mount design with dual-compartment transmitter housing

... Flowmeter sensor

Meter tube nominal diameter DN 100 (4 in.)				
DN / process connection		**L**	**Ø k**	**Weight max.**
80 (3 in.)	PN 16 (EN 1092-1 B1)	1222 (48.11)	160 (6.30)	126 (278)
	PN 40 (EN 1092-1 B1)			
	PN 63 (EN 1092-1 B2)	1234 (48.58)	170 (6.69)	130 (287)
	PN 100 (EN 1092-1 B2)		180 (7.09)	132 (291)
	CL150 (ASME B16.5)	1244 (48.98)	152.4 (6.00)	127 (280)
	CL300 (ASME B16.5)		168.1 (6.62)	135 (298)
	CL600 (ASME B16.5)		168.1 (6.62)	138 (304)
	CL900 (ASME B16.5)	1470 (57.87)	190.5 (7.50)	141 (311)
	CL1500 (ASME B16.5)	1500 (59.05)	203.2 (8.00)	153 (337)
	JIS 10K	1275 (50.20)	150 (5.91)	123 (271)
100 (4 in.)	PN 16 (EN 1092-1 B1)	1122 (44.17)	180 (7.09)	123 (271)
	PN 40 (EN 1092-1 B1)	1144 (45.04)	190 (7.48)	126 (278)
	PN 63 (EN 1092-1 B2)	1304 (51.34)	138 (5.43)	133 (293)
	PN 100 (EN 1092-1 B2)	1334 (52.52)	150 (5.91)	141 (311)
	CL150 (ASME B16.5)	1144 (45.04)	190.5 (7.50)	127 (280)
	CL300 (ASME B16.5)	1324 (52.13)	200.2 (7.88)	139 (306)
	CL600 (ASME B16.5)	1354 (53.31)	215.9 (8.50)	141 (311)
	CL900 (ASME B16.5)	1380 (54.33)	234.9 (9.25)	160 (353)
	CL1500 (ASME B16.5)	1400 (55.12)	241.3 (9.50)	174 (384)
	JIS 10K	1150 (45.28)	175 (6.89)	126 (278)
150 (6 in.)	PN 16 (EN 1092-1 B1)	1300 (51.18)	240 (9.44)	131 (289)
	PN 40 (EN 1092-1 B1)		250 (9.84)	139 (306)
	CL150 (ASME B16.5)	1330 (52.36)	241.3 (9.50)	137 (302)
	CL600 (ASME B16.5)	1435 (56,50)	–	–
	JIS 10K	1300 (51.18)	240 (9.44)	130 (287)

Tolerance for dimension L: +0 / −3 mm (+0 / −0.018 in.)

Devices with meter tube nominal diameter DN 150 and flange DN 100 to DN 200

Sensor with wetted parts made from stainless steel. All specified dimensions and weights are in mm (in.) or kg (lb).

Standard Version

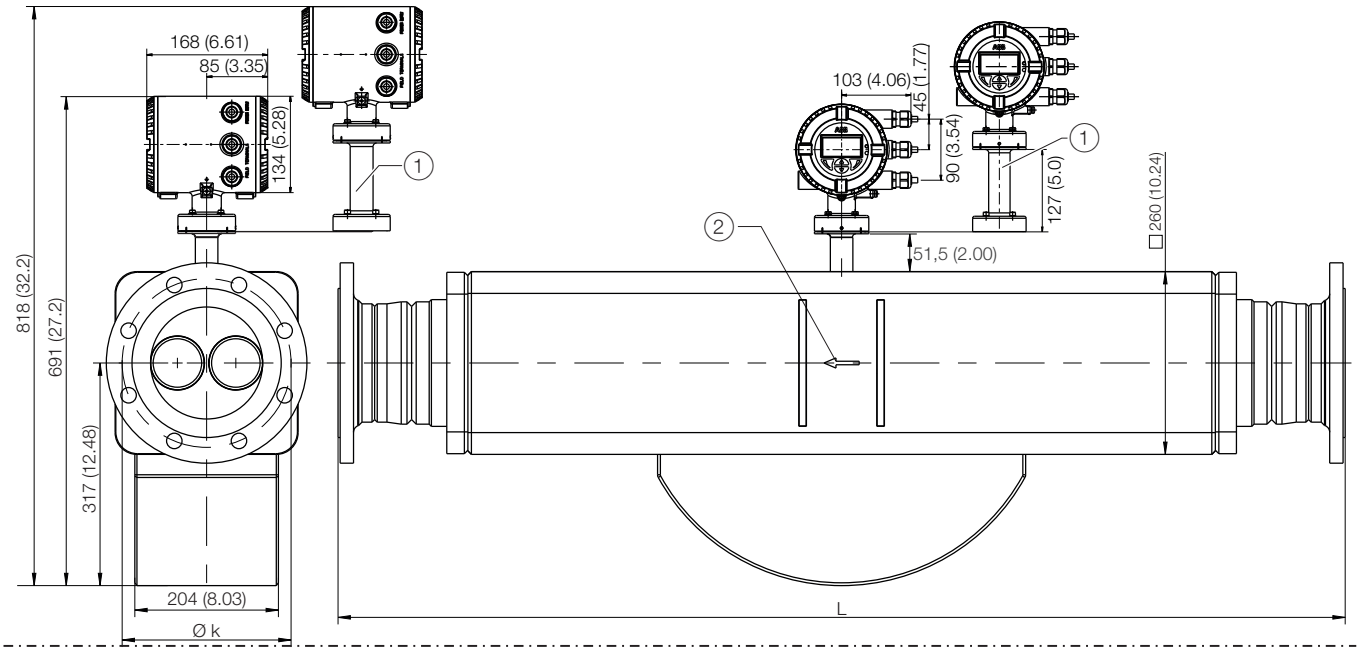

Marine version – CL1

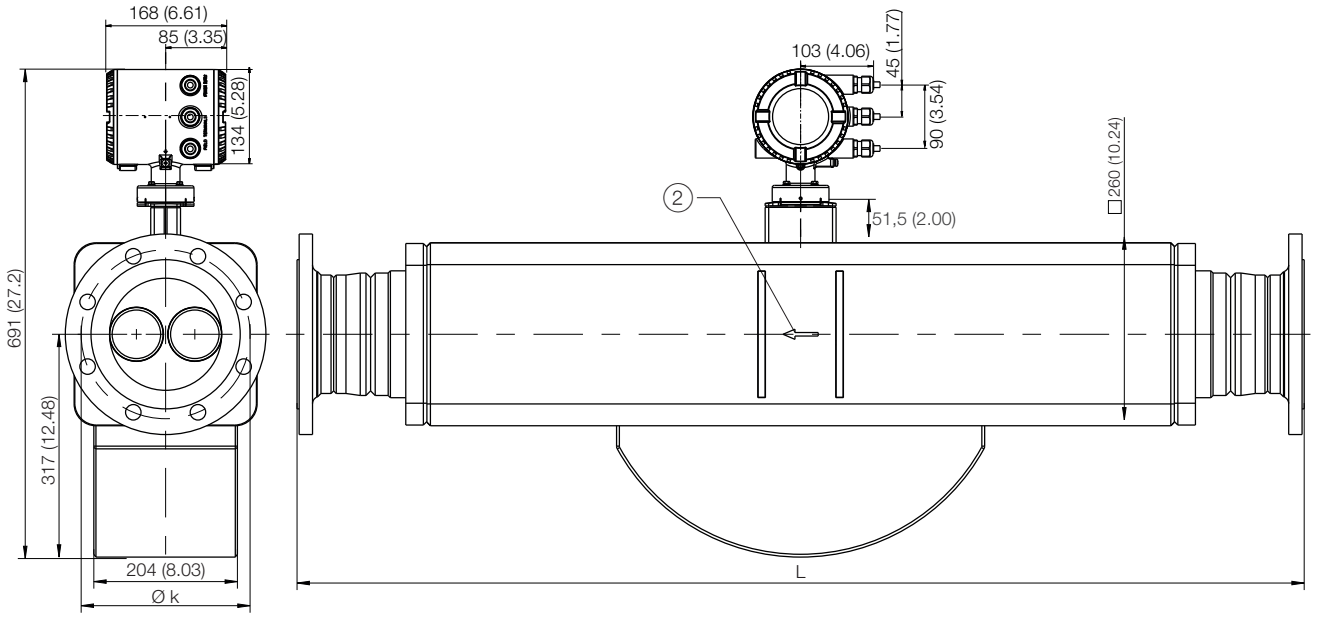

(1) 'Extended tower length – TE1, TE2' option or 'Pressure rating of sensor secondary housing – PR5, PR6, PR7' option

(2) Flow direction

Figure 4: Integral mount design with dual-compartment transmitter housing

... Flowmeter sensor

Meter tube nominal diameter DN 150 (6 in.)				
DN / process connection		**L**	**Ø k**	**Weight max.**
100 (4 in.)	PN 16 (EN 1092-1 B1)	1569 (61.77)	180 (7.09)	175 (386)
	PN 40 (EN 1092-1 B1)	1599 (62.95)	190 (7.48)	179 (395)
	CL150 (ASME B16.5)	1630 (64.17)	190.5 (7.50)	182 (401)
	CL300 (ASME B16.5)	1650 (64.96)	200.2 (7.88)	188 (414)
	CL600 (ASME B16.5)	1675 (65.94)	215.9 (8.50)	198 (437)
	CL900 (ASME B16.5)	1705 (67.13)	234.9 (9.25)	208 (459)
	CL1500 (ASME B16.5)	1725 (67.91)	241.3 (9.50)	223 (492)
150 (6 in.)	PN 16 (EN 1092-1 B1)	1421 (55.94)	240 (9.45)	178 (392)
	PN 40 (EN 1092-1 B1)	1461 (57.52)	250 (9.84)	186 (410)
	CL150 (ASME B16.5)	1485 (58.46)	241.3 (9.50)	185 (408)
	CL300 (ASME B16.5)	1505 (59.25)	269.7 (10.62)	203 (448)
	CL600 (ASME B16.5)	1555 (61.22)	292.1 (11.50)	225 (496)
	CL900 (ASME B16.5)	1605 (63.19)	317.5 (12.5)	249 (549)
	CL1500 (ASME B16.5)	1665 (65.55)		291 (642)
200 (8 in.)	PN 40 (EN 1092-1 B1)	1637 (64.45)	320 (12.6)	209 (461)
	CL150 (ASME B16.5)	1650 (64.96)	298.5 (11.75)	204 (450)
	CL300 (ASME B16.5)	1670 (65.75)	330.2 (13.0)	229 (505)
	CL600 (ASME B16.5)	1730 (68,11)	–	–
	JIS10K	1585 (62.4)	290 (11.42)	195 (430)

Tolerance for dimension L: +0 / −3 mm (+0 / −0.018 in.)

Devices DN 15 to 150 in NAMUR standard installation lengths (order option S5, S7)

Sensor with wetted parts made from stainless steel. All specified dimensions and weights are in mm (in.) or kg (lb).

Standard Version

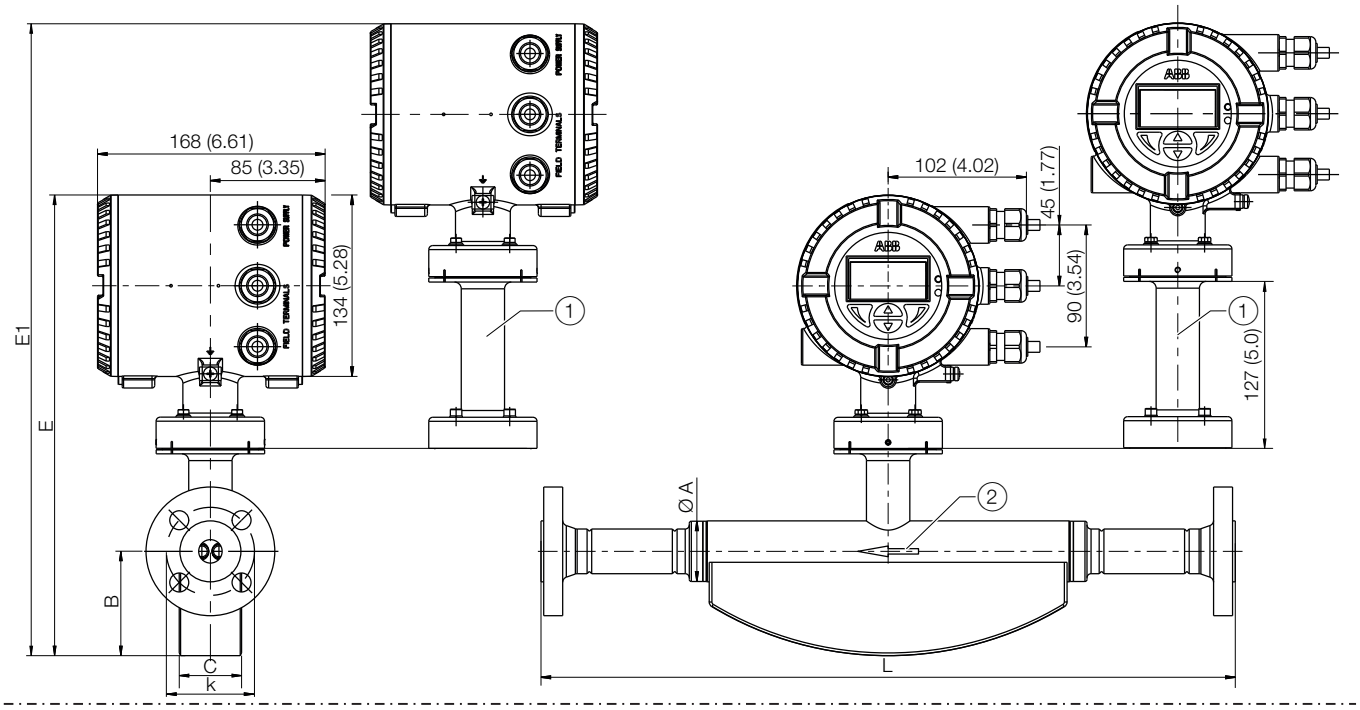

Marine version – CL1

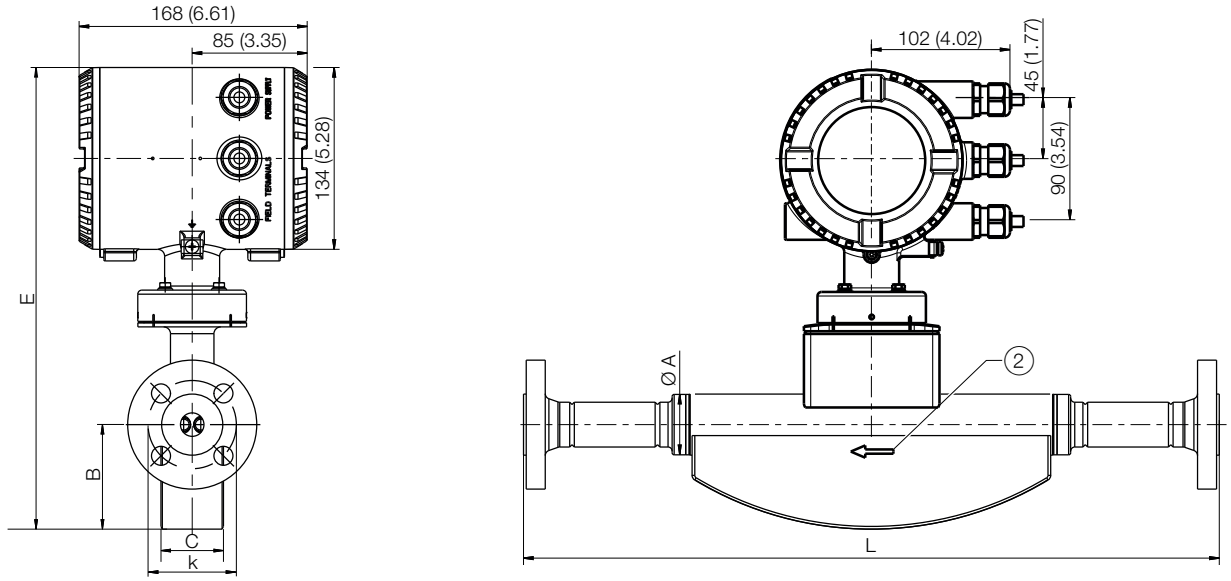

(1) 'Extended tower length – TE1, TE2' option or 'Pressure rating of sensor secondary housing – PR5, PR6, PR7' option

(2) Flow direction

Figure 5: Devices with integral mount design

Tolerance for dimension L: +0 / −3 mm (+0 / −0.018 in.)

... Flowmeter sensor

Devices DN 15 to 150 in NAMUR standard installation lengths

Meter tube	Process connection	L	Ø k	Ø A	B	C	E	E1*	Weight max.
	EN 1092-1 B1								
DN 15 (½ in.)	DN 15 (½ in.) / PN 40	510 (20.08)	60 (2.4)	44.5 (1.8)	77 (3.0)	46 (1.8)	340 (13.39)	467 (18.39)	13.5 (29.8)
DN 25 (1 in.)	DN 25 (1 in.) / PN 40	600 (23.62)	75 (3.0)	69.5 (2.74)	103 (4.06)	62 (2.44)	379 (14.92)	506 (19.92)	15 (33.1))
DN 50 (1 in.)	DN 50 (1 in.) / PN 40	715 (28.15)	125 (4.92)	99 (3.9)	125 (4.92)	80 (3.15)	416 (16.38)	543 (21.38)	31 (68.3)
DN 80 (3 in.)	DN 80 (3 in.) / PN 40	915 (36.02)	160 (6.30)	155 (6.1)	183 (7.2)	123 (4.84)	505 (19.88)	632 (24.88)	74 (163)
DN 100 (4 in.)	DN 100 (4 in.) / PN 16	1400 (55.12)	180 (7.09)	195 (7.68)	261 (10.28)	168 (6.61)	603 (23.74)	730 (28.74)	123 (271)
DN 150 (6 in.)	DN 150 (6 in.) / PN 16	1700 (66.93)	240 (9.45)	260 (10.24)	320 (12.6)	205 (8.07)	691 (27.2)	818 (32.2)	178 (392)

* Standard version: devices with ‘extended tower length – TE1, TE2’ option or ‘pressure rating of sensor secondary housing’ option.

Devices with meter tube nominal diameter DN 15 to 80 und connections in accordance with SMS 1145, DIN 11851, DIN 32676, DIN ISO 228, ASME BPE and ASME B 1.20.1

Sensor with wetted parts made from stainless steel. All specified dimensions and weights are in mm (in.) or kg (lb).

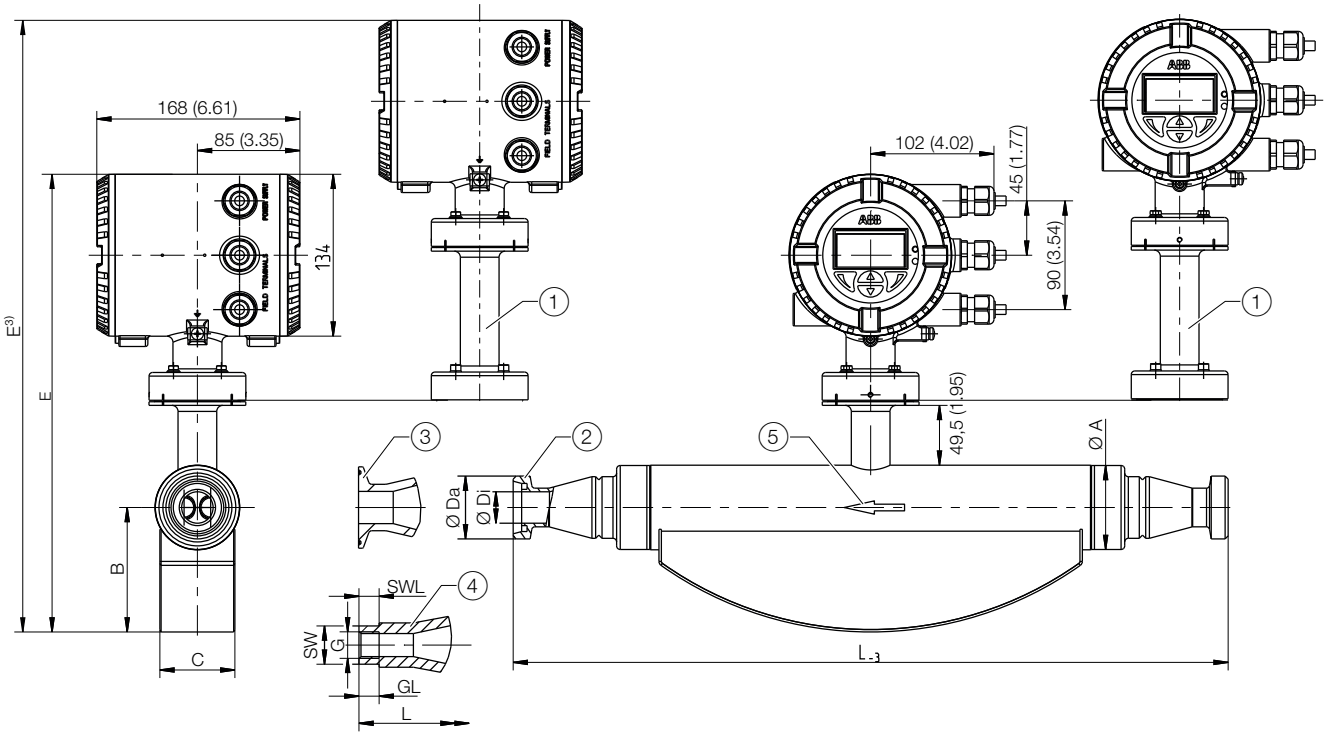

1. 'Extended tower length – TE1' option or 'Pressure rating of sensor secondary housing – PR5, PR6, PR7' option
2. Threaded spuds in accordance with DIN 11851 and SMS 1145
3. Clamping connection in accordance with DIN 32676 and ASME BPE
4. Female thread connection in accordance with DIN ISO 228 and ASME B 1.20.1
5. Flow direction

Figure 18: Integral mount design with dual-compartment transmitter housing

Process connection in accordance with SMS 1145 meter tube nominal diameter DN 25 to 80 (1 to 3 in.)

Meter tube	Process connection		L	Ø DA	Ø Di	Ø A	B	C	E	Approximate weight	
DN	DN	PN								Aluminum*	Stainless steel**
25 (1 in.)	25 (1 in.)	6	590 (23.2)	RD 40x⅙ in.	22.6 (0.89)	69.5	103	62	379 / 506***	13 (29)	14 (31)
	40 (1 ½ in.)			RD 60x⅙ in.	38 (1.50)	(2.74)	(4.06)	(2.44)	(14.92 / 19.92***)		
50 (2 in.)	40 (1 ½ in.)	6	763 (30.0)	RD 60x⅙ in.	35.5 (1.40)	99	125	80	416 / 543***	29 (64)	30 (66)
	50 (2 in.)		740 (29.1)	RD 70x⅙ in.	48.5 (1.91)	(3.46)	(4.92)	(3.15)	(16.38 / 21.38***)		
	65 (2 ½ in.)			RD 85x⅙ in.	60.5 (2.38)						
80 (3 in.)	65 (2 ½ in.)		990 (39.0)	RD 85x⅙ in.	60.5 (2.38)	155	183	123	505 / 632***	70 (154)	71 (156)
	80 (3 in.)		940 (37.0)	RD 98x¼ in.	72.6 (2.86)	(6.10)	(7.20)	(4.84)	(19.88 / 24.88***)		

* Devices with terminal boxes made from aluminum.

** Devices with terminal boxes made from stainless steel.

*** Devices with 'extended tower length' option or 'Pressure rating of sensor secondary housing' option.

... Flowmeter sensor

Process connection in accordance with DIN 11851 meter tube nominal diameter DN 15 to 80 (½ to 3 in.)

Meter tube	Process connection		L	Ø DA	Ø Di	Ø A	B	C	E	Approximate weight	
DN	DN	PN								Aluminum*	Stainless steel**
15 (½ in.)	10 (⅜ in.)	40	413 (16.3)	RD 28x⅛ in.	10 (0.39)	44.5	77 (3.03)	46 (1.81)	340 / 467***	9 / 10***	12 / 13***
	15 (½ in.)			RD 34x⅛ in.	16 (0.63)	(1.75)			(13.39 / 18.39***)	(20 / 22***)	(27 / 29***)
	20 (¾ in.)			RD 44x⅛ in.	20 (0.79)						
25 (1 in.)	20 (¾ in.)		590 (23.2)	RD 44x⅛ in.	20 (0.79)	69.5	103	62	379 / 506***	11 / 12***	14 / 15***
	25 (1 in.)			RD 52x⅛ in.	26 (1.02)	(2.74)	(4.06)	(2.44)	(14.92 / 19.92***)	(24 / 27***)	(31 / 33***)
	40 (1 ½ in.)			RD 65x⅛ in.	38 (1.5)						
50 (2 in.)	40 (1 ½ in.)		763 (30.0)	RD 65x⅛ in.	38 (1.5)	99 (3.46)	125	80	416 / 543***	27 / 28***	30 / 31***
	50 (2 in.)	25	740 (29.1)	RD 78x⅛ in.	50 (1.97)		(4.92)	(3.15)	(16.38 / 21.38***)	(60 / 62***)	(66 / 68***)
	65 (2 ½ in.)			RD 95x⅛ in.	66 (2.6)						
80 (3 in.)	65 (2 ½ in.)		990 (39.0)	RD 95x⅛ in.	66 (2.6)	155	183	123	505 / 632***	68 / 69***	71 / 72***
	80 (3 in.)		940 (37.0)	RD 110x¼ in.	81 (3.19)	(6.10)	(7.20)	(4.84)	(19.88 / 24.88***)	(150 / 152***)	(157 / 159***)
	100 (4 in.)			RD 130x¼ in.	100 (3.94)						

Process connection in accordance with DIN 32676 meter tube nominal diameter DN 15 to 80 (½ to 3 in.)

Meter tube	Process connection		L	Ø DA	Ø Di	Ø A	B	C	E	Approximate weight	
DN	DN	PN								Aluminum*	Stainless steel**
15 (½ in.)	10 (⅜ in.)	40	413 (16.3)	34 (1.34)	10 (0.39)	44.5	77 (3.03)	46 (1.81)	340 / 467***	9 / 10***	12 / 13***
	15 (½ in.)				16 (0.63)	(1.75)			(13.39 / 18.39***)	(20 / 22***)	(27 / 29***)
	20 (¾ in.)				20 (0.79)						
25 (1 in.)	20 (¾ in.)		590 (23.2)		20 (0.79)	69.5	103	62	379 / 506***	11 / 12***	14 / 15***
	25 (1 in.)			50.5 (1.99)	26 (1.02)	(2.74)	(4.06)	(2.44)	(14.92 / 19.92***)	(24 / 27***)	(31 / 33***)
	40 (1 ½ in.)				38 (1.5)						
50 (2 in.)	40 (1 ½ in.)		763 (30.0)		38 (1.5)	99 (3.46)	125	80	416 / 543***	27 / 28***	30 / 31***
	50 (2 in.)	25	740 (29.1)	64 (2.52)	50 (1.97)		(4.92)	(3.15)	(16.38 / 21.38***)	(60 / 62***)	(66 / 68***)
	65 (2 ½ in.)			91 (3.58)	66 (2.6)						
80 (3 in.)	65 (2 ½ in.)	10	950 (37.4)		66 (2.6)	155	183	123	505 / 632***	68 / 69***	71 / 72***
	80 (3 in.)		910 (35.83)	106 (4.17)	81 (3.19)	(6.10)	(7.20)	(4.84)	(19.88 / 24.88***)	(150 / 152***)	(157 / 159***)
	100 (4 in.)			119 (4.69)	100 (3.94)						

* Devices with terminal boxes made from aluminum.

** Devices with terminal boxes made from stainless steel.

*** Devices with 'extended tower length' option or 'Pressure rating of sensor secondary housing' option.

Tolerance for dimension L: +0 / −3 mm (+0 / −0.018 in.)

Process connection in accordance with ASME BPE, meter tube nominal diameter DN 15 to 80 (½ to 3 in.)

Meter tube	Process connection		L	Ø DA	Ø Di	Ø A	B	C	E	Approximate weight	
DN	DN	PN								Aluminum[1]	Stainless steel[2]
15 (½ in.)	⅜ in. type A	10	–	–	–	44.5 (1.75)	77 (3.03)	46 (1.81)	340 / 467[3] (13.39 / 18.39[3])	9 / 10[3] (20 / 22[3])	12 / 13[3] (27 / 29[3])
	½ in. type A		433 (17.05)	25 (0.98)	9.4 (0.37)						
	¾ in. type A		–	–	–						
25 (1 in.)	¾ in. type A		–	–	–	69.5 (2.74)	103 (4.06)	62 (2.44)	379 / 506[3] (14.92 / 19.92[3])	11 / 12[3] (24 / 27[3])	14 / 15[3] (31 / 33[3])
	1 in. type B		590 (23.23)	50.4 (1.98)	22.1 (0.87)						
	1 ½ in. type B		590 (23.23)	50.4 (1.98)	34.8 (1.37)						
50 (2 in.)	1 ½ in. type B		–	–	–	99 (3.46)	125 (4.92)	80 (3.15)	416 / 543[3] (16.38 / 21.38[3])	27 / 28[3] (60 / 62[3])	30 / 31[3] (66 / 68[3])
	2 in. type B		740 (29.13)	63.9 (2.52)	47.5 (1.87)						
	2 ½ in. type B		–	–	–						
80 (3 in.)	2 ½ in. type B		950 (37.40)	77.4 (3.05)	60.2 (2.37)	155 (6.10)	183 (7.20)	183 (7.20)	505 / 632[3] (19.88 / 24.88[3])	68 / 69[3] (150 / 152[3])	71 / 72[3] (157 / 159[3])
	3 in. type B		910 (35.83)	90.9 (3.19)	72.9 (2.87)						
	4 in. type B		910 (35.83)	118.9 (4.68)	97.4 (3.83)						

Process connection in accordance with DIN ISO 228 and ASME B 1.20.1, meter tube nominal diameter DN 15 to 80 (½ to 3 in.)

Meter tube	Process connection		L	GL	WS[4]	SWL	Ø A	B	C	E	Approximate weight	
DN	DN / G	PN									Aluminum[1]	Stainless steel[2]
15 (½ in.)	8 (¼ in.) / G ¼ in.	100	450 (17.72)	10 (0.39)	19	10 (0.39)	44.5 (1.75)	77 (3.03)	46 (1.81)	340 / 467[3] (13.39 / 18.39[3])	9 / 10[3] (20 / 22[3])	12 / 13[3] (27 / 29[3])
	15 (½ in.) / G ½ in.			13.5 (0.53)	27	15 (0.59)						
	25 (1 in.) / G 1 in.		490 (19.29)	17 (0.67)	50	20 (0.79)						
	15 (½ in.) / ½ in. NPT		450 (17.72)	15.6 (0.61)	27	15 (0.59)						

1 Devices with terminal boxes made from aluminum.

2 Devices with terminal boxes made from stainless steel.

3 Devices with ‘extended tower length’ option or ‘Pressure rating of sensor secondary housing’ option.

4 Dimension SW: Width across flats specified in mm.

Tolerance for dimension L: +0 / −3 mm (+0 / −0.018 in.)

... Flowmeter sensor

Dimensions for devices with remote mount design

Devices with meter tube nominal diameter DN 15 to 50 and flange DN 10 to 65

Sensor with wetted parts made from stainless steel. All specified dimensions and weights are in mm (in.) or kg (lb).

Standard Version

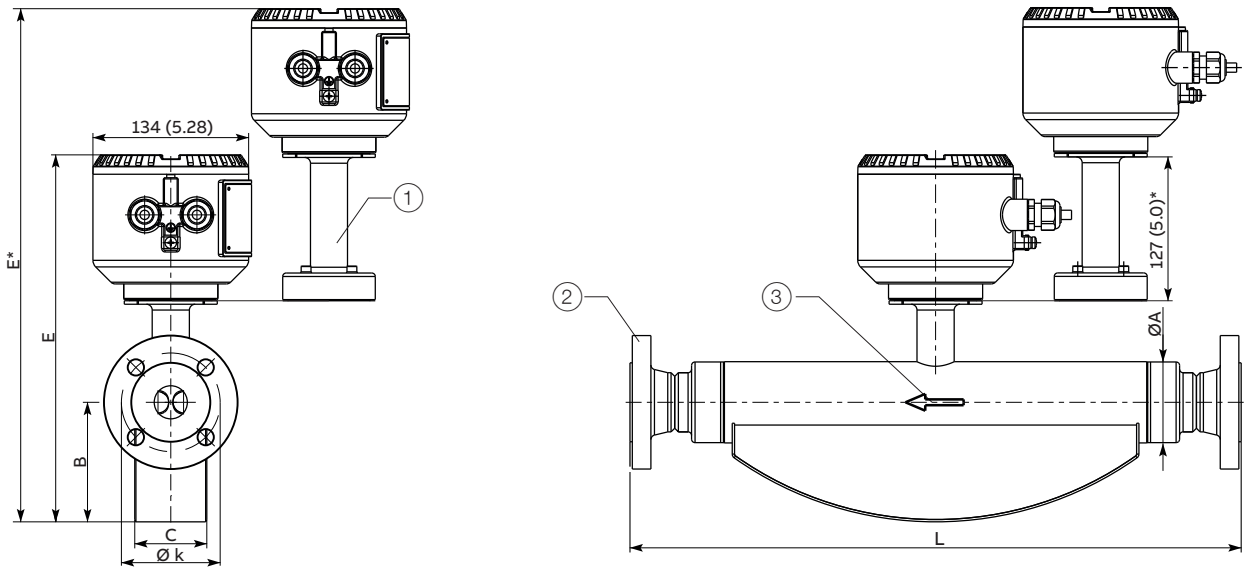

Marine version – CL1

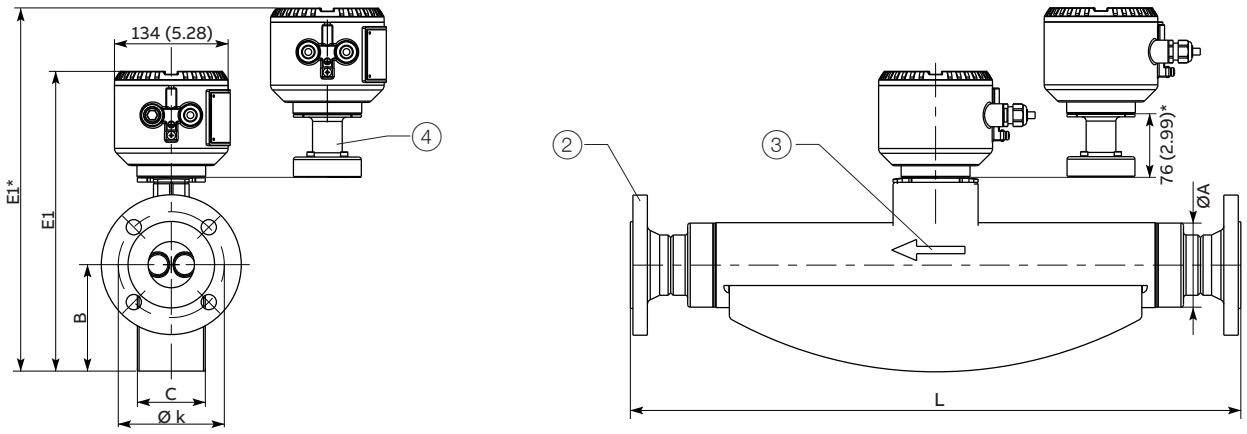

1. 'Extended tower length – TE1, TE2' option or 'Pressure rating of sensor secondary housing – PR5, PR6, PR7' option
2. Flange in accordance with EN 1092-1, ASME B16.5, ISO 7005 (connection dimensions for ASME flanges in accordance with ASME B16.5 (ANSI))
3. Flow direction
4. 'Extended tower length– TE3' option

Figure 6: Remote mount design

* Standard version: devices with 'extended tower length – TE1, TE2' option or 'pressure rating of sensor secondary housing' option.

** Marine version – CL1: devices with 'extended tower length – TE3' option

Meter tube nominal diameter DN 15 (½ in.)									
DN / process connection		**L**	**Ø k**	**Ø A**	**B**	**C**	**E**	**E1**	**Weight max.**
10 (⅜ in.)	PN 40 (EN 1092-1 B1)	385 (15.2)	60 (2.4)	44.5 (1.8)	80 (3.2)	49 (1.93)	283 (11.1) 410* (16.1*)	283 (11.1) 357** (14.1**)	13 (28.7))
	JIS 10K	385 (15.2)	65 (2.6)						
15 (½ in.)	PN 40 (EN 1092-1 B1)	385 (15.2)	65 (2.6)						
	PN 63 (EN 1092-1 B2) PN 100 (EN 1092-1 B2)	403 (15.9)	75 (3.0)						
	CL150 (ASME B16.5)	435 (17.1)	60.5 (2.4)						
	CL300 (ASME B16.5) CL600 (ASME B16.5)	421 (16.6)	66.5 (2.6)						
	CL900 (ASME B16.5) CL1500 (ASME B16.5)	421 (16.6)	82.6 (3.3)						
	JIS 10K	385 (15.2)	70 (2.8)						
20 (¾ in.)	PN 40 (EN 1092-1 B1)	421 (16.6)	75 (3.0)						
	CL150 (ASME B16.5)	421 (16.6)	69.9 (2.8)						
	JIS 10K	421 (16.6)	75 (3.0)						

Meter tube nominal diameter DN 25 (1 in.)									
DN / process connection		**L**	**Ø k**	**Ø A**	**B**	**C**	**E**	**E1**	**Weight max.**
20 (¾ in.)	PN 40 (EN 1092-1 B1)	576 (22.7)	75 (3.0)	69.5 (2.74)	103 (4.06)	62 (2.44)	324 (12.8) 451* (17.8*)	324 (12.8) 398** (15.7**)	15 (33.1))
	CL150 (ASME B16.5)	575 (22.6)	69.9 (2.8)						
	JIS 10K	576 (22.7)	75 (3.0)						
25 (1 in.)	PN 40 (EN 1092-1 B1)	525 (20.7)	85 (3.3)						
	PN 63 (EN 1092-1 B2) PN 100 (EN 1092-1 B2)	564 (22.2)	100 (3.9)						
	CL150 (ASME B16.5)	575 (22.6)	79.2 (3.1)						
	CL300 (ASME B16.5) CL600 (ASME B16.5)	576 (22.7)	88.9 (3.5)						
	CL900 (ASME B16.5) CL1500 (ASME B16.5)	576 (22.7)	101.6 (4.0)						
	JIS 10K	525 (20.7)	90 (3.54)						
40 (1 ½ in.)	PN 40 (EN 1092-1 B1)	576 (22.7)	110 (4.33)						
	PN 63 (EN 1092-1 B2) PN 100 (EN 1092-1 B2)	572 (22.5)	125 (4.92)						
	CL150 (ASME B16.5)	576 (22.7)	98.6 (3.88)						
	CL300 (ASME B16.5) CL600 (ASME B16.5)	576 (22.7)	114.3 (45.0)						
	JIS 10K	576 (22.7)	105 (4.13)						

* Standard version: devices with ‘extended tower length – TE1, TE2’ option or ‘pressure rating of sensor secondary housing’ option.

** Marine version – CL1: devices with ‘extended tower length – TE3’ option

Tolerance for dimension L: +0 / −3 mm (+0 / −0.018 in.)

... Flowmeter sensor

Meter tube nominal diameter DN 50 (2 in.)									
DN / process connection		**L**	**Ø k**	**Ø A**	**B**	**C**	**E**	**E1**	**Weight max.**
40 (1 ½ in.)	PN 40 (EN 1092-1 B1)	763 (30)	110 (4.33)	99 (3.9)	126 (4.96)	80 (3.15)	354 (13.9)	354 (13.9)	31 (68.3)
	PN 63 (EN 1092-1 B2)	745 (29.33)	125 (4.92)				481* (18.94*)	428** (16.9**)	
	PN 100 (EN 1092-1 B2)								
	CL150 (ASME B16.5)	763 (30)	98.6 (3.88)						
	CL300 (ASME B16.5)	756 (29.76)	114.3 (4.5)						
	CL600 (ASME B16.5)								
	CL900 (ASME B16.5)	780 (30.71)	124 (4.88)						
	CL1500 (ASME B16.5)								
	JIS 10K	763 (30)	105 (4.13)						
50 (2 in.)	PN 40 (EN 1092-1 B1)	715 (28.15)	125 (4.92)						
	PN 63 (EN 1092-1 B2)	745 (29.3)	135 (5.31)						
	PN 100 (EN 1092-1 B2)	745 (29.3)	145 (5.71)						
	CL150 (ASME B16.5)	715 (28.15)	120.7 (4.75)						
	CL300 (ASME B16.5)	763 (30)	127 (5.0)						
	CL600 (ASME B16.5)	773 (30.43)	127 (5.0)						
	CL900 (ASME B16.5)	790 (31.1)	165.1 (6.5)						
	CL1500 (ASME B16.5)								
	JIS 10K	715 (28.15)	120 (4.72)						
65 (2 ½ in.)	PN 40 (EN 1092-1 B1)	763 (30)	145 (5.71)						
	CL150 (ASME B16.5)	756 (29.8)	139.7 (5.5)						
	CL900 (ASME B16.5)	800 (31.5)	190.5 (7.5)						
	CL1500 (ASME B16.5)								
	JIS 10K	763 (30)	140 (5.51)						

* Standard version: devices with ‘extended tower length – TE1, TE2’ option or ‘pressure rating of sensor secondary housing’ option.

** Marine version – CL1: devices with ‘extended tower length – TE3’ option

Tolerance for dimension L: +0 / −3 mm (+0 / −0.018 in.)

Devices with meter tube nominal diameter DN 80 and flange DN 65 to 100

Sensor with wetted parts made from stainless steel. All specified dimensions and weights are in mm (in.) or kg (lb).

Standard Version

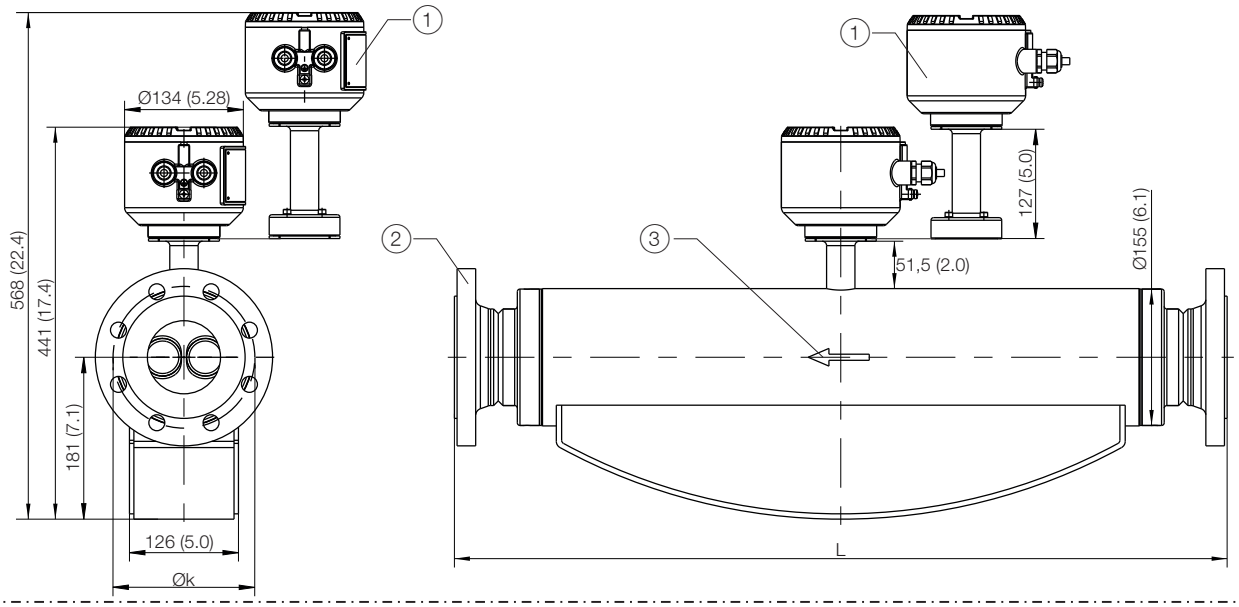

Marine version – CL1

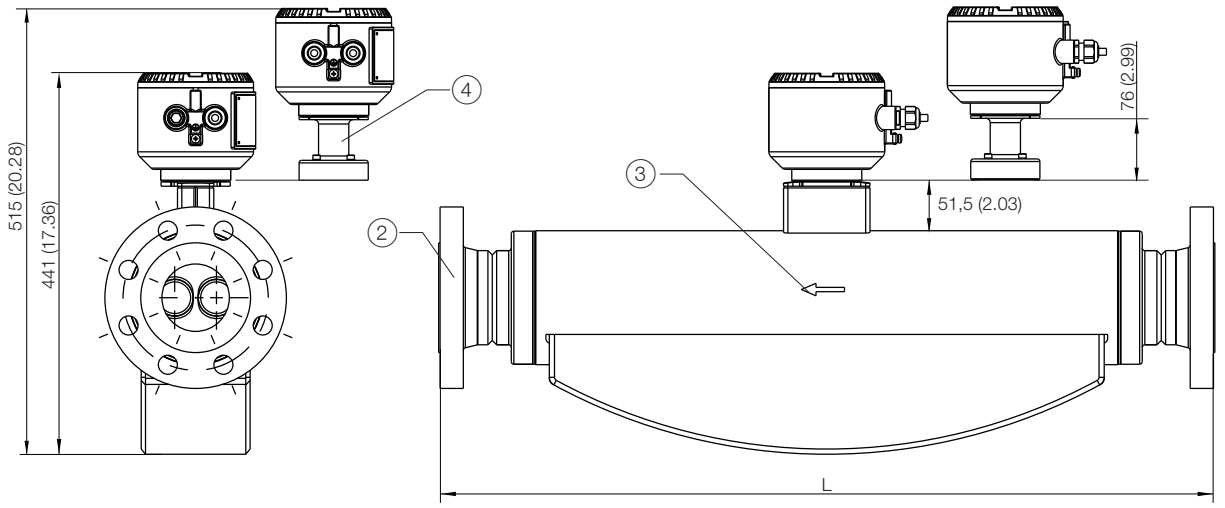

1. 'Extended tower length – TE1, TE2' option or 'Pressure rating of sensor secondary housing – PR5, PR6, PR7' option
2. Flange in accordance with EN 1092-1, ASME B16.5, ISO 7005 (connection dimensions for ASME flanges in accordance with ASME B16.5 (ANSI))
3. Flow direction
4. 'Extended tower length– TE3' option

Figure 7: Remote mount design

... Flowmeter sensor

Meter tube nominal diameter DN 80 (3 in.)				
DN / process connection		**L**	**Ø k**	**Weight max.**
65 (2 ½ in.)	PN 16 (EN 1092-1 B1)	–*	–*	–*
	PN 40 (EN 1092-1 B1)	910 (35.83)	145 (5.71)	74 (163.1)
	PN 63 (EN 1092-1 B2)		160 (6.3)	78 (172.0)
	PN 100 (EN 1092-1 B2)		170 (6.69)	82 (180.8)
	CL150 (ASME B16.5)	920 (36.22)	–*	–*
	CL300 (ASME B16.5)	920 (36.22)	149.4 (5.88)	76 (167.6)
	CL600 (ASME B16.5)			77 (169.8)
	CL900 (ASME B16.5)	965 (37.99)	190.5 (7.5)	94 (207.2)
	CL1500 (ASME B16.5)			
	JIS 10K	910 (35.83)	140 (5.5)	74 (163.1)
80 (3 in.)	PN 16 (EN 1092-1 B1)	870 (34.25)	160 (6.30)	74 (163.1)
	PN 40 (EN 1092-1 B1)			75 (165.4)
	PN 63 (EN 1092-1 B2)	910 (35.83)	170 (6.69)	79 (174.2)
	PN 100 (EN 1092-1 B2)		180 (7.09)	85 (187.4)
	CL150 (ASME B16.5)	880 (34.65)	152.4 (6.00)	76 (165.4)
	CL300 (ASME B16.5)	895 (35.24)	168.1 (6.62)	79 (174.2)
	CL600 (ASME B16.5)	920 (36.22)		82 (180.8)
	CL900 (ASME B16.5)	1100 (43.31)	190.5 (7.50)	94 (207.2)
	CL1500 (ASME B16.5)	1300 (51.18)	203.2 (8.00)	106 (233.7)
	JIS 10K	870 (34.25)	150 (5.91)	75 (165.4)
100 (4 in.)	PN 16 (EN 1092-1 B1)	875 (34.45)	180 (7.09)	75 (165.4)
	PN 40 (EN 1092-1 B1)		190 (7.48)	76 (167.5)
	PN 63 (EN 1092-1 B2)	1060 (41.73)	200 (7.87)	86 (189.6)
	PN 100 (EN 1092-1 B2)	1080 (42.52)	210 (8.27)	94 (207.2)
	CL150 (ASME B16.5)	880 (34.65)	190.5 (7.50)	77 (169.8)
	CL300 (ASME B16.5)	1075 (42.32)	200.2 (7.88)	91 (200.6)
	CL600 (ASME B16.5)	1100 (43.31)	215.9 (8.50)	101 (222.7)
	CL900 (ASME B16.5)	1130 (44.49)	234.9 (9.25)	111 (244.7)
	CL1500 (ASME B16.5)	1150 (45.28)	241.3 (9.50)	126 (277.8)
	JIS 10K	1060 (41.7)	175 (6.9)	86 (189.6)

* On request

Tolerance for dimension L: +0 / −3 mm (+0 / −0.018 in.)

Devices with meter tube nominal diameter DN 100 and flange DN 80 to 100

Sensor with wetted parts made from stainless steel. All specified dimensions and weights are in mm (in.) or kg (lb).

Standard Version

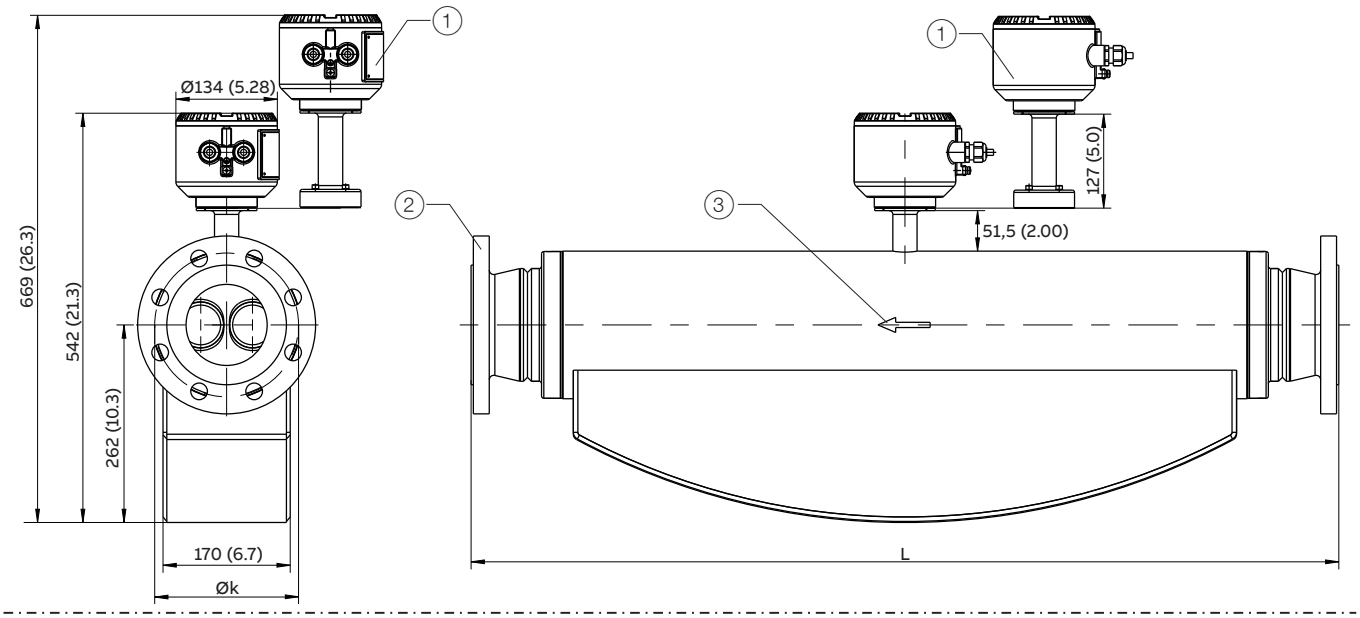

Marine version – CL1

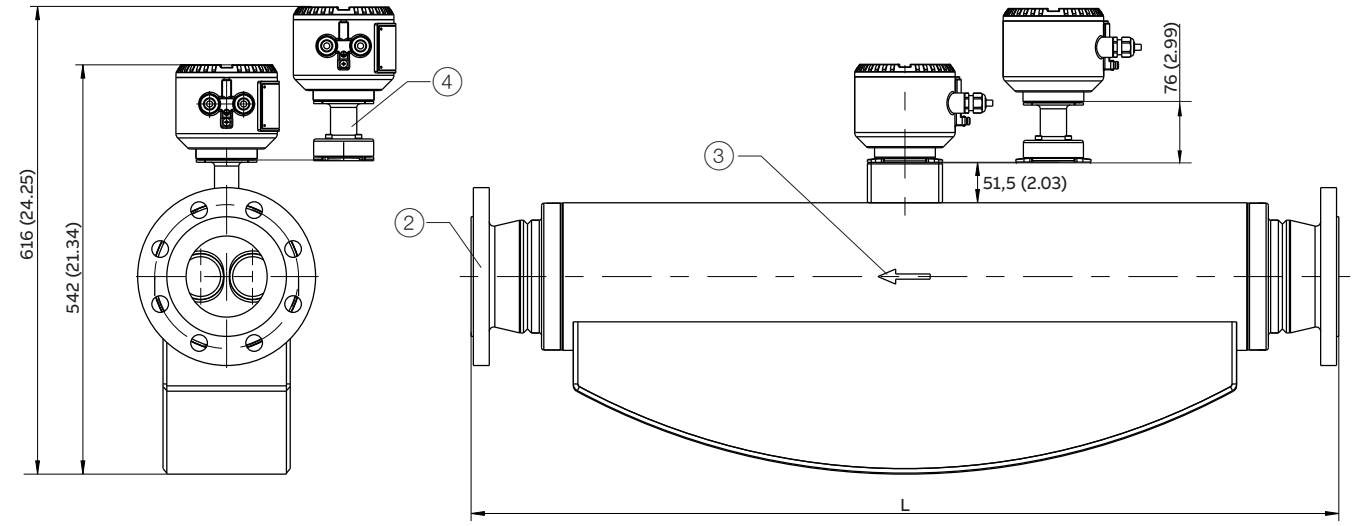

1. 'Extended tower length – TE1, TE2' option or 'Pressure rating of sensor secondary housing – PR5, PR6, PR7' option
2. Flange in accordance with EN 1092-1, ASME B16.5, ISO 7005 (connection dimensions for ASME flanges in accordance with ASME B16.5 (ANSI))
3. Flow direction
4. 'Extended tower length– TE3' option

Figure 8: Remote mount design

... Flowmeter sensor

Meter tube nominal diameter DN 100 (4 in.)				
DN / process connection		**L**	**Ø k**	**Weight max.**
80 (3 in.)	PN 16 (EN 1092-1 B1)	1222 (48.11)	160 (6.30)	126 (278)
	PN 40 (EN 1092-1 B1)			126 (278)
	PN 63 (EN 1092-1 B2)	1234 (48.58)	170 (6.69)	130 (287)
	PN 100 (EN 1092-1 B2)		180 (7.09)	132 (291)
	CL150 (ASME B16.5)	1244 (48.98)	152.4 (6.00)	127 (280)
	CL300 (ASME B16.5)		168.1 (6.62)	135 (298)
	CL600 (ASME B16.5)		168.1 (6.62)	138 (304)
	CL900 (ASME B16.5)	1470 (57.87)	190.5 (7.50)	141 (311)
	CL1500 (ASME B16.5)	1500 (59.05)	203.2 (8.00)	153 (337)
	JIS 10K	1275 (50.20)	150 (5.91)	123 (271)
100 (4 in.)	PN 16 (EN 1092-1 B1)	1122 (44.17)	180 (7.09)	123 (271)
	PN 40 (EN 1092-1 B1)	1144 (45.04)	190 (7.48)	126 (278)
	PN 63 (EN 1092-1 B2)	1304 (51.34)	138 (5.43)	133 (293)
	PN 100 (EN 1092-1 B2)	1334 (52.52)	150 (5.91)	141 (311)
	CL150 (ASME B16.5)	1144 (45.04)	190.5 (7.50)	127 (280)
	CL300 (ASME B16.5)	1324 (52.13)	200.2 (7.88)	139 (306)
	CL600 (ASME B16.5)	1354 (53.31)	215.9 (8.50)	141 (311)
	CL900 (ASME B16.5)	1380 (54.33)	234.9 (9.25)	160 (353)
	CL1500 (ASME B16.5)	1400 (55.12)	241.3 (9.50)	174 (384)
	JIS 10K	1150 (45.28)	175 (6.89)	126 (278)
150 (6 in.)	PN 16 (EN 1092-1 B1)	1300 (51.18)	240 (9.44)	131 (289)
	PN 40 (EN 1092-1 B1)	1330 (52.36)	250 (9.84)	139 (306)
	CL150 (ASME B16.5)		241.3 (9.50)	137 (302)
	CL600 (ASME B16.5)	1435 (56,50)	–	–
	JIS 10K		240 (9.44)	130 (287)

Tolerance for dimension L: +0 / −3 mm (+0 / −0.018 in.)

Devices with meter tube nominal diameter DN 150 and flange DN 100 to DN 200

Sensor with wetted parts made from stainless steel. All specified dimensions and weights are in mm (in.) or kg (lb).

Standard Version

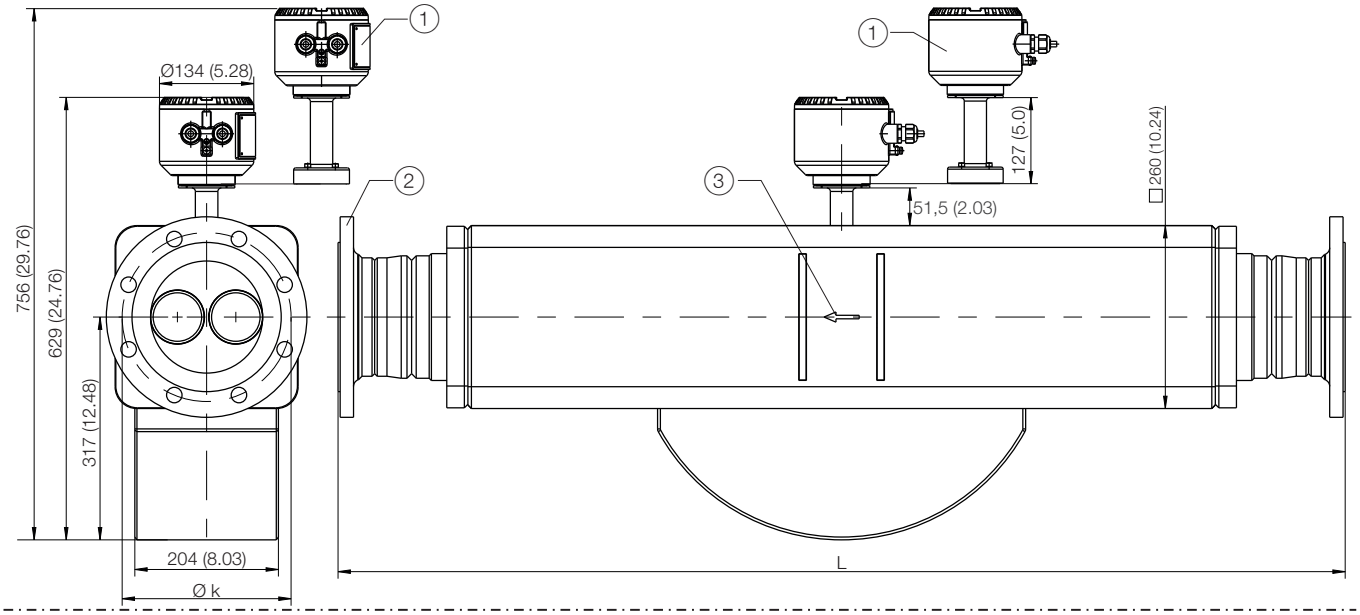

Marine version – CL1

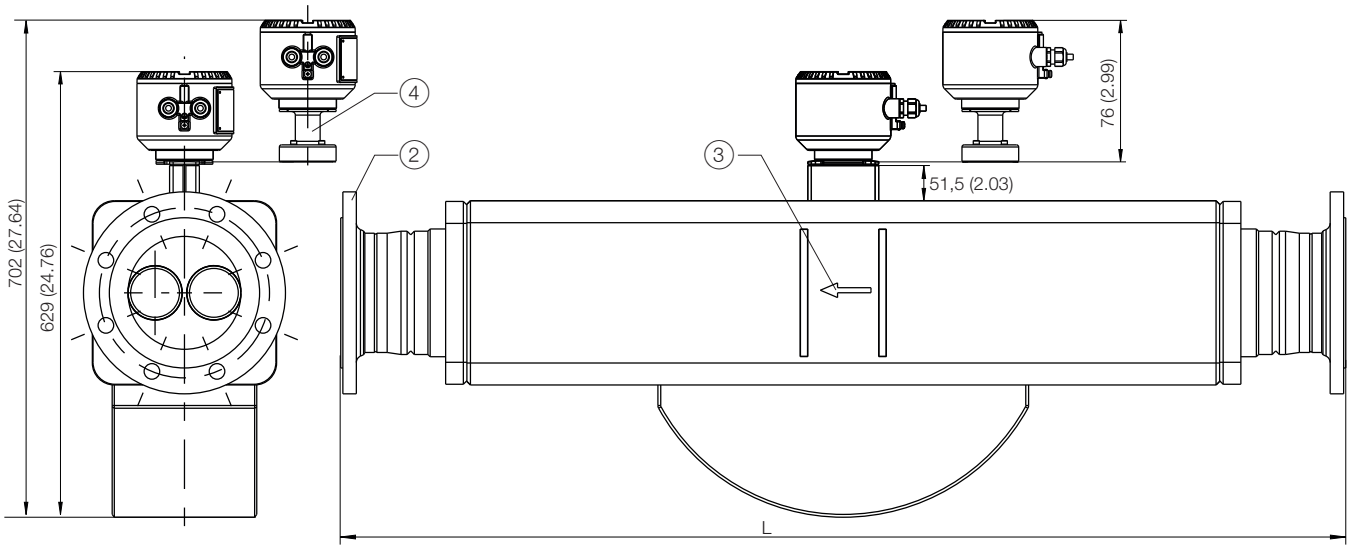

1. ‘Extended tower length – TE1, TE2’ option or ‘Pressure rating of sensor secondary housing – PR5, PR6, PR7’ option
2. Flange in accordance with EN 1092-1, ASME B16.5, ISO 7005 (connection dimensions for ASME flanges in accordance with ASME B16.5 (ANSI))
3. Flow direction
4. ‘Extended tower length– TE3’ option

Figure 9: Remote mount design

... Flowmeter sensor

Meter tube nominal diameter DN 150 (6 in.)				
DN / process connection		**L**	**Ø k**	**Weight max.**
100 (4 in.)	PN 16 (EN 1092-1 B1)	1569 (61.77)	180 (7.09)	175 (386)
	PN 40 (EN 1092-1 B1)	1599 (62.95)	190 (7.48)	179 (395)
	CL150 (ASME B16.5)	1630 (64.17)	190.5 (7.50)	182 (401)
	CL300 (ASME B16.5)	1650 (64.96)	200.2 (7.88)	188 (414)
	CL600 (ASME B16.5)	1675 (65.94)	215.9 (8.50)	198 (437)
	CL900 (ASME B16.5)	1705 (67.13)	234.9 (9.25)	208 (459)
	CL1500 (ASME B16.5)	1725 (67.91)	241.3 (9.50)	223 (492)
150 (6 in.)	PN 16 (EN 1092-1 B1)	1421 (55.94)	240 (9.45)	178 (392)
	PN 40 (EN 1092-1 B1)	1461 (57.52)	250 (9.84)	186 (410)
	CL150 (ASME B16.5)	1485 (58.46)	241.3 (9.50)	185 (408)
	CL300 (ASME B16.5)	1505 (59.25)	269.7 (10.62)	203 (448)
	CL600 (ASME B16.5)	1555 (61.22)	292.1 (11.50)	225 (496)
	CL900 (ASME B16.5)	1605 (63.19)	317.5 (12.5)	249 (549)
	CL1500 (ASME B16.5)	1665 (65.55)		291 (642)
200 (8 in.)	PN 40 (EN 1092-1 B1)	1637 (64.45)	320 (12.6)	209 (461)
	CL150 (ASME B16.5)	1650 (64.96)	298.5 (11.75)	204 (450)
	CL300 (ASME B16.5)	1670 (65.75)	330.2 (13.0)	229 (505)
	CL600 (ASME B16.5)	1730 (68,11)	–	–
	JIS10K	1585 (62.4)	290 (11.42)	195 (430)

Tolerance for dimension L: +0 / −3 mm (+0 / −0.018 in.)

Devices DN 15 to 150 in NAMUR standard installation lengths (order option S5, S7)

Sensor with wetted parts made from stainless steel. All specified dimensions and weights are in mm (in.) or kg (lb).

Standard Version

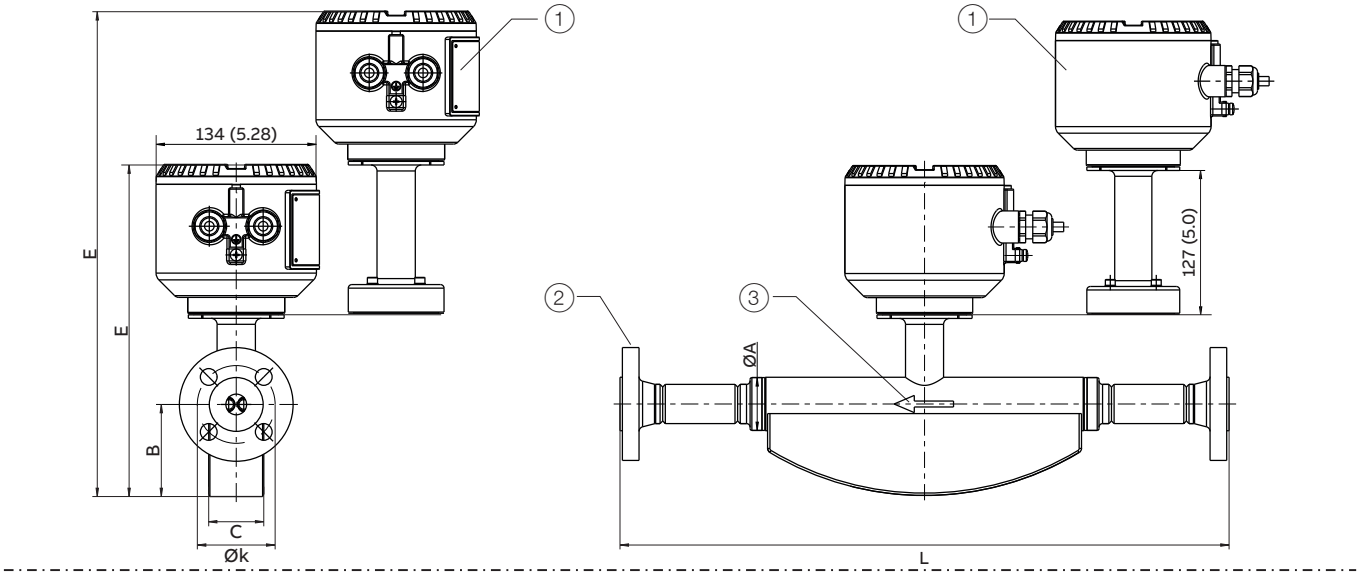

Marine version – CL1

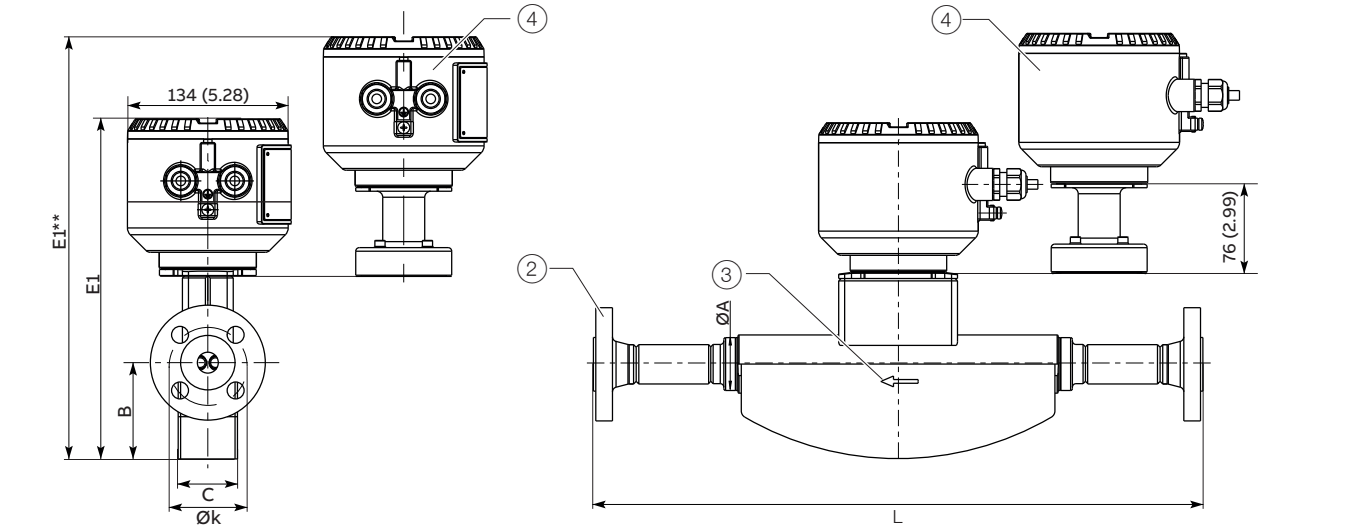

1. 'Extended tower length – TE1, TE2' option or 'Pressure rating of sensor secondary housing – PR5, PR6, PR7' option
2. Flange in accordance with EN 1092-1
3. Flow direction
4. 'Extended tower length– TE3' option

Figure 10: Remote mount design

* Standard version: devices with 'extended tower length – TE1, TE2' option or 'pressure rating of sensor secondary housing' option.

** Marine version – CL1: devices with 'extended tower length – TE3' option

... Flowmeter sensor

Devices DN 15 to 150 in NAMUR standard installation lengths

Meter tube	Process connection EN 1092-1 B1	L	Ø k	Ø A	B	C	E	E1	Approximate weight
DN 15 (½ in.)	DN 15 (½ in.) / PN 40	510 (20.08)	60 (2.4)	44.5 (1.8)	77 (3.0)	46 (1.8)	283 (11.1) 410* (16.1*)	283 (11.1) 357** (14.1**)	13.5 (29.8)
DN 25 (1 in.)	DN 25 (1 in.) / PN 40	600 (23.62)	75 (3.0)	69.5 (2.74)	103 (4.06)	62 (2.44)	324 (12.8) 451* (17.8*)	324 (12.8) 398** (15.7**)	15 (33.1)
DN 50 (1 in.)	DN 50 (1 in.) / PN 40	715 (28.15)	125 (4.92)	99 (3.9)	125 (4.92)	80 (3.15)	354 (13.9) 481* (18.94*)	354 (13.9) 428** (16.9**)	31 (68.3)
DN 80 (3 in.)	DN 80 (3 in.) / PN 40	915 (36.02)	160 (6.30)	155 (6.1)	183 (7.2)	123 (4.84)	445 (17.52) 572* (22.52*)	–	74 (163)
DN 100 (4 in.)	DN 100 (4 in.) / PN 16	1400 (55.12)	180 (7.09)	195 (7.68)	261 (10.28)	168 (6.61)	541 (21.3) 668* (26.3*)	–	123 (271)
DN 150 (6 in.)	DN 150 (6 in.) / PN 16	1700 (66.93)	240 (9.45)	260 (10.24)	320 (12.6)	205 (8.07)	630 (24.8) 757* (29.8*)	–	178 (392)

* Standard version: devices with ‘extended tower length – TE1, TE2’ option or ‘pressure rating of sensor secondary housing’ option.

** Marine version – CL1: devices with ‘extended tower length – TE3’ option

Tolerance for dimension L: +0 / −3 mm (+0 / −0.018 in.)

Devices with meter tube nominal diameter DN 15 to 80 und connections in accordance with SMS 1145, DIN 11851, DIN 32676, DIN ISO 228, ASME BPE and ASME B 1.20.1

Sensor with wetted parts made from stainless steel. All specified dimensions and weights are in mm (in.) or kg (lb).

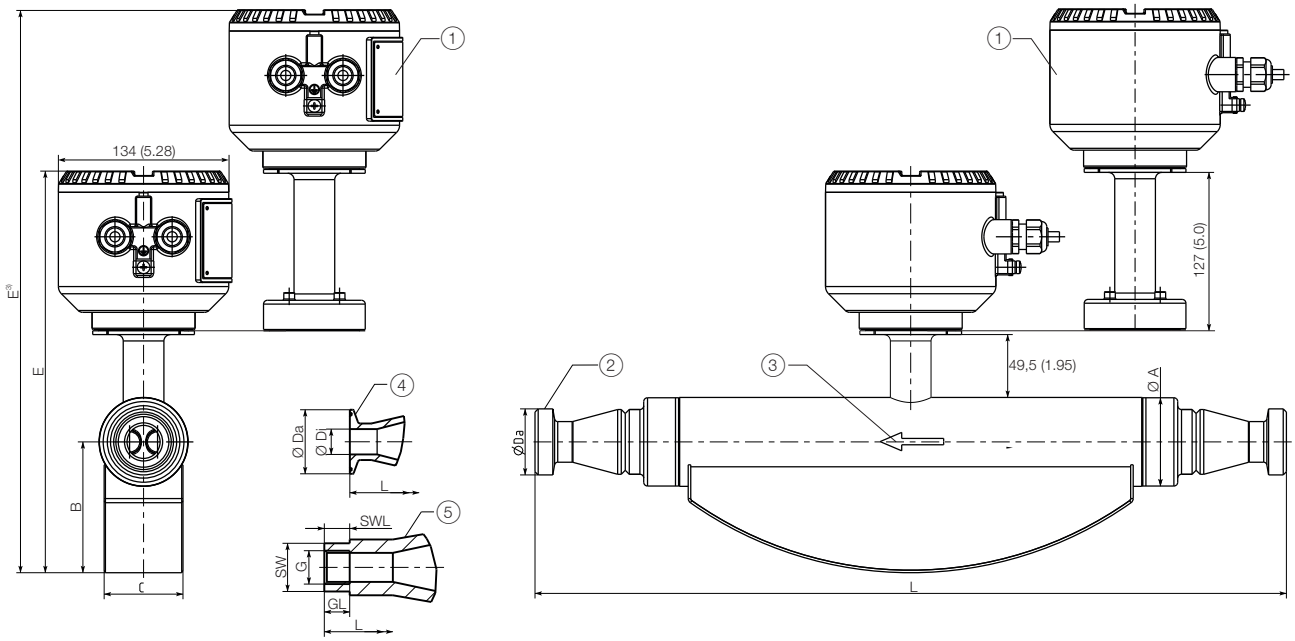

1. 'Extended tower length – TE1, TE2' option or 'Pressure rating of sensor secondary housing – PR5, PR6, PR7' option
2. Threaded spuds in accordance with DIN 11851 and SMS 1145
3. Flow direction
4. Clamping connection in accordance with DIN 32676 and ASME BPE
5. Female thread connection in accordance with DIN ISO 228 and ASME B 1.20.1

Figure 11: Remote mount design

Process connection in accordance with SMS 1145 meter tube nominal diameter DN 25 to 80 (1 to 3 in.)

Meter tube	Process connection		L	Ø DA	Ø Di	Ø A	B	C	E	Approximate weight	
DN	DN	PN								Aluminum*	Stainless steel**
25 (1 in.)	25 (1 in.)	6	590 (23.2)	RD 40x⅙ in.	22.6 (0.89)	69.5	103	62	317 / 444***	11 / 12***	14 / 15***
	40 (1 ½ in.)			RD 60x⅙ in.	38 (1.50)	(2.74)	(4.06)	(2.44)	(12.48 / 17.48***)	(24 / 27***)	(31 / 33***)
50 (2 in.)	40 (1 ½ in.)	6	763 (30.0)	RD 60x⅙ in.	35.5 (1.40)	99	125	80	354 / 481***	27 / 28***	30 / 31***
	50 (2 in.)		740 (29.1)	RD 70x⅙ in.	48.5 (1.91)	(3.46)	(4.92)	(3.15)	(13.94 / 18.94***)	(60 / 62***)	(66 / 68***)
	65 (2 ½ in.)			RD 85x⅙ in.	60.5 (2.38)						
80 (3 in.)	65 (2 ½ in.)		990 (39.0)	RD 85x⅙ in.	60.5 (2.38)	155	183	123	445 / 572***	68 / 69***	71 / 72***
	80 (3 in.)		940 (37.0)	RD 98x¼ in.	72.6 (2.86)	(6.10)	(7.20)	(4.84)	(17.52 / 22.52***)	(150 / 152***)	(157 / 159***)

* Devices with terminal boxes made from aluminum.

** Devices with terminal boxes made from stainless steel.

*** Devices with 'extended tower length' option or 'Pressure rating of sensor secondary housing' option.

... Flowmeter sensor

Process connection in accordance with DIN 11851 meter tube nominal diameter DN 15 to 80 (½ to 3 in.)

Meter tube	Process connection		L	Ø DA	Ø Di	Ø A	B	C	E	Approximate weight	
DN	DN	PN								Aluminum*	Stainless steel**
15 (½ in.)	10 (⅜ in.)	40	413 (16.3)	RD 28x⅛ in.	10 (0.39)	44.5	77 (3.03)	46 (1.81)	278 / 405***	9 / 10***	12 / 13***
	15 (½ in.)			RD 34x⅛ in.	16 (0.63)	(1.75)			(10.94 / 15.94***)	(20 / 22***)	(27 / 29***)
	20 (¾ in.)			RD 44x⅛ in.	20 (0.79)						
25 (1 in.)	20 (¾ in.)		590 (23.2)	RD 44x⅛ in.	20 (0.79)	69.5	103	62	317 / 444***	11 / 12***	14 / 15***
	25 (1 in.)			RD 52x⅛ in.	26 (1.02)	(2.74)	(4.06)	(2.44)	(12.48 / 17.48***)	(24 / 27***)	(31 / 33***)
	40 (1 ½ in.)			RD 65x⅛ in.	38 (1.5)						
50 (2 in.)	40 (1 ½ in.)		763 (30.0)	RD 65x⅛ in.	38 (1.5)	99 (3.46)	125	80	354 / 481***	27 / 28***	30 / 31***
	50 (2 in.)	25	740 (29.1)	RD 78x⅛ in.	50 (1.97)		(4.92)	(3.15)	(13.94 / 18.94***)	(60 / 62***)	(66 / 68***)
	65 (2 ½ in.)			RD 95x⅛ in.	66 (2.6)						
80 (3 in.)	65 (2 ½ in.)		990 (39.0)	RD 95x⅛ in.	66 (2.6)	155	183	123	445 / 572***	68 / 69***	71 / 72***
	80 (3 in.)		940 (37.0)	RD 110x¼ in.	81 (3.19)	(6.10)	(7.20)	(4.84)	(17.52 / 22.52***)	(150 / 152***)	(157 / 159***)
	100 (4 in.)			RD 130x¼ in.	100 (3.94)						

Process connection in accordance with DIN 32676 meter tube nominal diameter DN 15 to 80 (½ to 3 in.)

Meter tube	Process connection		L	Ø DA	Ø Di	Ø A	B	C	E	Approximate weight	
DN	DN	PN								Aluminum*	Stainless steel**
15 (½ in.)	10 (⅜ in.)	40	413 (16.3)	34 (1.34)	10 (0.39)	44.5	77 (3.03)	46 (1.81)	278 / 405***	9 / 10***	12 / 13***
	15 (½ in.)				16 (0.63)	(1.75)			(10.94 / 15.94***)	(20 / 22***)	(27 / 29***)
	20 (¾ in.)				20 (0.79)						
25 (1 in.)	20 (¾ in.)		590 (23.2)		20 (0.79)	69.5	103	62	317 / 444***	11 / 12***	14 / 15***
	25 (1 in.)			50.5 (1.99)	26 (1.02)	(2.74)	(4.06)	(2.44)	(12.48 / 17.48***)	(24 / 27***)	(31 / 33***)
	40 (1 ½ in.)				38 (1.5)						
50 (2 in.)	40 (1 ½ in.)		763 (30.0)		38 (1.5)	99 (3.46)	125	80	354 / 481***	27 / 28***	30 / 31***
	50 (2 in.)	25	740 (29.1)	64 (2.52)	50 (1.97)		(4.92)	(3.15)	(13.94 / 18.94***)	(60 / 62***)	(66 / 68***)
	65 (2 ½ in.)			91 (3.58)	66 (2.6)						
80 (3 in.)	65 (2 ½ in.)	10	950 (37.4)		66 (2.6)	155	183	123	445 / 572***	68 / 69***	71 / 72***
	80 (3 in.)		910 (35.83)	106 (4.17)	81 (3.19)	(6.10)	(7.20)	(4.84)	(17.52 / 22.52***)	(150 / 152***)	(157 / 159***)
	100 (4 in.)			119 (4.69)	100 (3.94)						

* Devices with terminal boxes made from aluminum.

** Devices with terminal boxes made from stainless steel.

*** Devices with 'extended tower length' option or 'Pressure rating of sensor secondary housing' option.

Tolerance for dimension L: +0 / −3 mm (+0 / −0.018 in.)

Dimensions for sensors featuring meter tubes with nominal diameter DN 15 to 80 (½ to 3 in.) and process connection in accordance with ASME BPE

Meter tube	Process connection		L	Ø DA	Ø Di	Ø A	B	C	E	Approximate weight	
DN	DN	PN								Aluminum[1]	Stainless steel[2]
15 (½ in.)	⅜ in. type A	10	–	–	–	44.5 (1.75)	77 (3.03)	46 (1.81)	278 / 405[3] (10.94 / 15.94[3])	9 / 10[3] (20 / 22[3])	12 / 13[3] (27 / 29[3])
	½ in. type A		433 (17.05)	25 (0.98)	9.4 (0.37)						
	¾ in. type A		–	–	–						
25 (1 in.)	¾ in. type A		–	–	–	69.5 (2.74)	103 (4.06)	62 (2.44)	317 / 444[3] (12.48 / 17.48[3])	11 / 12[3] (24 / 27[3])	14 / 15[3] (31 / 33[3])
	1 in. type B		590 (23.23)	50.4 (1.98)	22.1 (0.87)						
	1 ½ in. type B		590 (23.23)	50.4 (1.98)	34.8 (1.37)						
50 (2 in.)	1 ½ in. type B		–	–	–	99 (3.46)	125 (4.92)	80 (3.15)	354 / 481[3] (13.94 / 18.94[3])	27 / 28[3] (60 / 62[3])	30 / 31[3] (66 / 68[3])
	2 in. type B		740 (29.13)	63.9 (2.52)	47.5 (1.87)						
	2 ½ in. type B		–	–	–						
80 (3 in.)	2 ½ in. type B		950 (37.40)	77.4 (3.05)	60.2 (2.37)	155 (6.10)	183 (7.20)	183 (7.20)	445 / 572[3] (17.52 / 22.52[3])	68 / 69[3] (150 / 152[3])	71 / 72[3] (157 / 159[3])
	3 in. type B		910 (35.83)	90.9 (3.19)	72.9 (2.87)						
	4 in. type B		910 (35.83)	118.9 (4.68)	97.4 (3.83)						

Process connection in accordance with DIN ISO 228 and ASME B 1.20.1, meter tube nominal diameter DN 15 to 80 (½ to 3 in.)

Meter tube	Process connection		L	GL[4]	WS[5]	SWL[5]	Ø A	B	C	E	Approximate weight	
DN	DN / G	PN									Aluminum[1]	Stainless steel[2]
15 (½ in.)	8 (¼ in.) / G ¼ in.	100	450 (17.72)	10 (0.39)	19	10 (0.39)	44.5 (1.75)	77 (3.03)	46 (1.81)	278 / 405[3] (10.94 / 15.94[3])	9 / 10[3] (20 / 22[3])	12 / 13[3] (27 / 29[3])
	15 (½ in.) / G ½ in.			13.5 (0.53)	27	15 (0.59)						
	25 (1 in.) / G 1 in.		490 (19.29)	17 (0.67)	50	20 (0.79)						
	15 (½ in.) / ½ in. NPT		450 (17.72)	15.6 (0.61)	27	15 (0.59)						

1 Devices with terminal boxes made from aluminum.

2 Devices with terminal boxes made from stainless steel.

3 Devices with ‘extended tower length’ option or ‘Pressure rating of sensor secondary housing’ option.

4 Dimension GL: Provide thread length of female thread.

5 Dimension SW: Provide width across flats in mm, Dimension SWL: Provide length of wrench flats in mm.

Tolerance for dimension L: +0 / −3 mm (+0 / −0.018 in.)

... Flowmeter sensor

Sensor with wetted parts made from C4 or C22 nickel alloy

For devices with wetted parts made from C4 or C22 nickel alloy, the installation length (L) is different from previous tables. All other dimensions and the weight are unchanged. All dimensions specified in mm (in.).

Dimensions for sensors with process connection in accordance with EN 1092-1 and ASME B16.5 (ANSI)

Meter tube nominal diameter	Process connection	L EN 1092-1 B1 PN 16	L EN 1092-1 B1 PN 40	L EN 1092-1 B2 PN 63	L EN 1092-1 B2 PN 100	L ASME CL150	L ASME CL300	L ASME CL600	L JIS 10K
DN 15 (½ in.)	DN 10 (¼ in.)	–	449 (17.7)	449 (17.7)	449 (17.7)	–	–	–	449 (17.7)
	DN 15 (½ in.)	–	442 (17.4)	442 (17.4)	442 (17.4)	442 (17.4)	442 (17.4)	442 (17.4)	442 (17.4)
	DN 20 (¾ in.)	–	428 (16.9)	428 (16.9)	428 (16.9)	428 (16.9)	428 (16.9)	428 (16.9)	428 (16.9)
DN 25 (1 in.)	DN 20 (¾ in.)	–	646 (25.4)	646 (25.4)	646 (25.4)	646 (25.4)	646 (25.4)	646 (25.4)	646 (25.4)
	DN 25 (1 in.)	–	614 (24.2)	614 (24.2)	614 (24.2)	614 (24.2)	614 (24.2)	614 (24.2)	614 (24.2)
	DN 40 (1 ½ in.)	–	576 (22.7)	576 (22.7)	576 (22.7)	576 (22.7)	576 (22.7)	576 (22.7)	576 (22.7)
DN 50 (2 in.)	DN 40 (1 ½ in.)	–	814 (32.0)	814 (32.0)	814 (32.0)	814 (32.0)	814 (32.0)	814 (32.0)	814 (32.0)
	DN 50 (2 in.)	–	764 (30.1)	764 (30.1)	764 (30.1)	764 (30.1)	764 (30.1)	764 (30.1)	764 (30.1)
	DN 65 (2 ½ in.)	–	819 (32.2)	819 (32.2)	819 (32.2)	792 (31.2)	792 (31.2)	792 (31.2)	819 (32.2)
DN 80 (3 in.)	DN 65 (2 ½ in.)	–	1021 (40.2)	1021 (40.2)	1021 (40.2)	1021 (40.2)	1021 (40.2)	1021 (40.2)	1021 (40.2)
	DN 80 (3 in.)	–	971 (38.2)	–	971 (38.2)	971 (38.2)	971 (38.2)	971 (38.2)	971 (38.2)
	DN 100 (4 in.)	971 (38.2)	971 (38.2)	971 (38.2)	971 (38.2)	971 (38.2)	971 (38.2)	971 (38.2)	971 (38.2)
DN 100 (4 in.)	DN 80 (3 in.)	1357 (53.4)	1357 (53.4)	1357 (53.4)	1357 (53.4)	1357 (53.4)	1357 (53.4)	1357 (53.4)	1357 (53.4)
	DN 100 (4 in.)	1280 (50.4)	1280 (50.4)	1280 (50.4)	1280 (50.4)	1280 (50.4)	1280 (50.4)	1280 (50.4)	1280 (50.4)
	DN 150 (6 in.)	1261 (49.6)	1261 (49.6)	1261 (49.6)	1261 (49.6)	1261 (49.6)	1261 (49.6)	1261 (49.6)	1261 (49.6)
DN 150 (6 in.)	DN 100 (4 in.)	1592 (62.7)	1592 (62.7)	1632 (64.3)	1632 (64.3)	1592 (62.7)	1632 (64.3)	1632 (64.3)	1592 (62.7)
	DN 150 (6 in.)	1502 (59.1)	1502 (59.1)	1542 (60.7)	1542 (60.7)	1502 (59.1)	1542 (60.7)	1542 (60.7)	1502 (59.1)

L dimension tolerance:

- Meter tube nominal diameter DN 15 to 50 (½ to 2 in.): +0 / −3 mm (+0 / −0.018 in.)
- Meter tube nominal diameter DN 80 (3 in.): +0 / −5 mm (+0 / −0.2 in.)
- Meter tube nominal diameter DN 100 to 150 (4 to 6 in.): +0 / −8 mm (+0 / −0.31 in.)

Ordering information

Note

For additional information on dependencies and restrictions, and for help on product selection, please refer to the Online Product Selection Assistant (PSA) at www.abb.us/flow-selector.

CoriolisMaster FCB430, FCB450

Main ordering information											
CoriolisMaster FCB430 Coriolis Mass Flowmeter	**FCB430**	**XX**	**XX**	**XXXXX**	XX	XX	X	X	XX	XX	X
CoriolisMaster FCB450 Coriolis Mass Flowmeter	**FCB450**	**XX**	**XX**	**XXXXX**	XX	XX	X	X	XX	XX	X
Explosion Protection Certification											
General Purpose		Y0									
ATEX / IECEx (Zone 2 / 22)		A2									
ATEX / IECEx (Zone 1 / 21)		A1									
cFMus version Class 1 Div. 2 (Zone 2 / 21)		F2									
cFMus version Class 1 Div. 1 (Zone 1 / 21)		F1									
Connection Design / Connection Box Material / Cable Glands											
Integral, defined by Transmitter housing			Y0								
Remote / Aluminium / 1 x M20 x 1.5			U1								
Remote / Aluminium / 1 x NPT 1/2 in.			U2								
Remote / Stainless Steel / 1 x M20 x 1.5			A1								
Remote / Stainless Steel / 1 x NPT 1/2 in.			A2								
Meter Size / Connection Size											
DN 15 (1/2 in.) / DN 10 (3/8 in.)				015E1							
DN 15 (1/2 in.) / DN 15 (1/2 in.)				015R0							
DN 15 (1/2 in.) / DN 20 (3/4 in.)				015R1							
DN 25 (1 in.) / DN 20 (3/4 in.)				025E1							
DN 25 (1 in.) / DN 25 (1 in.)				025R0							
DN 25 (1 in.) / DN 40 (1-1/2 in.)				025R2							
DN 50 (2 in.) / DN 40 (1-1/2 in.)				050E1							
DN 50 (2 in.) / DN 50 (2 in.)				050R0							
DN 50 (2 in.) / DN 65 (2-1/2 in.)				050R1							
DN 80 (3 in.) / DN 65 (2-1/2 in.)				080E1							
DN 80 (3 in.) / DN 80 (3 in.)				080R0							
DN 80 (3 in.) / DN 100 (4 in.)				080R1							
DN 100 (4 in.) / DN 80 (3 in.)				100E1							
DN 100 (4 in.) / DN 100 (4 in.)				100R0							
DN 100 (4 in.) / DN 150 (6 in.)				100R2							
DN 150 (6 in.) / DN 100 (4 in.)				150E2							
DN 150 (6 in.) / DN 150 (6 in.)				150R0							
DN 150 (6 in.) / DN 200 (8 in.)				150R2							

Continued see next page

... Flowmeter sensor

Main ordering information							
CoriolisMaster FCB430 Coriolis Mass Flowmeter	**XX**	**XX**	**X**	**X**	XX	XX	X
CoriolisMaster FCB450 Coriolis Mass Flowmeter	**XX**	**XX**	**X**	**X**	XX	XX	X
Process Connection Type							
Flanges DIN PN 16	D2						
Flanges DIN PN 40	D4						
Flanges DIN PN 63	D5						
Flanges DIN PN 100	D6						
Flanges EN 1092-1 PN 40, NAMUR length (DN 15, DN 25, DN 50)	S5						
Flanges with groove PN40 EN1092-10-D	S6						
Flanges EN 1092-1 PN 16, NAMUR length (DN 100, DN 150)	S7						
Flanges ANSI / ASME B16.5 Class 150	A1						
Flanges ANSI / ASME B16.5 Class 300	A3						
Flanges ANSI / ASME B16.5 Class 600	A6						
Flanges ANSI / ASME B16.5 Class 900 (p-t rating Cl 600)	A7						
Flanges ANSI / ASME B16.5 Class 1500 (p-t rating Cl 600)	A8						
Flanges JIS 10K	J1						
Flanges JIS 20K	J3						
Sanitary Couplings SMS1145 for pipes acc. DIN11866 Series A	K1						
Tri-Clamp acc. DIN 32676	T1						
Tri-Clamp acc. BPE	T3						
Food industry fittings acc. DIN 11851	F1						
Female NPT thread	N5						
Female G thread	M5						
Others	Z9						
Material of Wetted Parts							
Stainless steel		A1					
Ni-Alloy		C1*					
Flow Calibration							
Flow forward +/- 0.40 % of flow rate, Gas 1 % of flow rate			A**				
Flow forward +/- 0.25 % of flow rate, Gas 1 % of flow rate			B**				
Flow forward +/- 0.2 % of flow rate, Gas 1 % of flow rate			E**				
Forward +/-0.15% of flow rate, Gas 0.5 % of flow rate			C***				
Forward +/-0.10% of flow rate, Gas 0.5 % of flow rate			D***				
Flow forward / reverse +/- 0.40 % of flow rate, Gas 1 % of flow rate			J**				
Flow forward / reverse +/- 0.25 % of flow rate, Gas 1 % of flow rate			K**				
Flow forward / reverse +/- 0.20 % of flow rate, Gas 1 % of flow rate			N**				
Flow forward / reverse +/- 0.15 % of flow rate, Gas 0.5 % of flow rate			L***				
Flow forward / reverse +/- 0.10 % of flow rate, Gas 0.5 % of flow rate			M***				
Others			Z				

* If the sensor wetted parts are Ni-Alloy based, parts of the sensor housing are Ni-Alloy based too.

** Only with CoriolisMaster FCB430

*** Only with CoriolisMaster FCB450

Continued see next page

Main ordering information				
CoriolisMaster FCB430 Coriolis Mass Flowmeter	**X**	**XX**	**XX**	**X**
CoriolisMaster FCB450 Coriolis Mass Flowmeter	**X**	**XX**	**XX**	**X**
Density Calibration				
Density 10 g/l	1*			
Density 2 g/l	3***			
Density 1 g/l	4***			
Density 0.5 g/l	5***			
Others	9			
Connection Design / Transmitter Housing Type / Transmitter Housing Material / Cable Glands				
Integral / Single-compartment / Aluminum / 3 x M20 x 1,5		S1		
Integral / Single-compartment / Aluminum / 3 x NPT 1/2 in.		S2		
Integral / Dual compartment / Aluminum / 3 x M20 x 1.5		D1		
Integral / Dual compartment / Aluminum / 3 x NPT 1/2 in.		D2		
Integral / Dual compartment / Aluminum / 3 x NPT 1/2 in. (Exd, XP)		D5		
Integral / Dual compartment / Aluminum / 3 x M20 x 1.5 (Exd, XP)		D6		
Remote / Not specified		Y0		
Others		Z9		
Outputs				
Current output 1 (active or passive), digital output 1 & 2 (passive), HART			G0	
Current output 1 (active or passive), digital output 1 & 2 (passive), 24 V DC transmitter loop power supply, HART			G1	
Current output 1 (active or passive), digital output 1 & 2 (passive), current output 2 (passive), HART			G2	
Current output 1 (active or passive), digital output 1 & 2 (passive), current output 2 (passive), current output 3 (passive), HART			G3	
Current output 1 (active or passive), digitial output 1 & 2 (passive), current output 2 (passive), 24 V DC transmitter loop power supply, HART			G4	
Current output 1 (active or passive), digital output 1 & 2 (passive), HART, MODBUS			M1	
Current output 1 (active or passive), digital output 1 & 2 (passive), HART, PROFIBUS DP			D1	
Without			Y0	
Power Supply				
100 ... 230 V AC				A
11 ... 30 V DC				C
Without				Y

* Only with CoriolisMaster FCB430

** Only with CoriolisMaster FCB450

Continued see next page

... Flowmeter sensor

Additional ordering information

Additional ordering information	
CoriolisMaster FCB430 Coriolis Mass Flowmeter	XX
CoriolisMaster FCB450 Coriolis Mass Flowmeter	XX
Certificates	
Test report 2.2 acc. EN 10204 confirmation of material	C1
Material monitoring with inspection certificate 3.1 acc. EN 10204	C2
Material monitoring with inspection certificate 3.2 acc. EN 10204	C3
Material monitoring NACE MR 01-75 with inspection certificate 3.1 acc. EN 10204	CN
Declaration of compliance with the order 2.1 acc. EN 10204	C4
Inspection certificate 3.1 acc. EN 10204 for visual, dimensional and functional test	C6
Inspection certificate 3.1 acc. EN 10204 for positive material identification PMI (confirmation only)	CA
Pressure test acc. AD2000	CB
Test package (pressure test, non-destructive test, welder & welding procedure certificate)	CT
Inspection certificate 3.1 acc. EN 10204 for NDE of welds	C8
Certificate of accuracy 2.1 acc. EN 10204	CM
Inspection certificate 3.1 acc. EN 10204 for positive material identification PMI (inlclusive heat analysis)	CR
Others	CZ

Continued see next page

Additional ordering information								
CoriolisMaster FCB430 Coriolis Mass Flowmeter	**XXX**	**XXX**	**XXX**	**XXX**	**XX**	**XX**	**XXX**	**XX**
CoriolisMaster FCB450 Coriolis Mass Flowmeter	**XXX**	**XXX**	**XXX**	**XXX**	**XX**	**XX**	**XXX**	**XX**
Ships Register Certifications								
DNVGL	CL1							
Custody Transfer Certification								
Custody transfer acc. MID (OIML)		CM1*						
Additional Output 1								
1 x Digital input			DRN					
1 x Digital output			DRG					
1 x Analog output passive (4 ... 20 mA)			DRA					
24 V DC transmitter loop power supply			DRT					
Additional Output 2								
1 x Digital input				DSN				
1 x Digital output				DSG				
1 x Analog output passive (4 ... 20 mA)				DSA				
1 x MODBUS				DRM				
1 x PROFIBUS DP				DRD				
Integrated Digital Display (LCD)								
No Display, with Blind Cover					L0			
With capacitive sensorbuttons / Display (TTG) / Glass cover					L2			
Functional Safety								
SIL2 certificate						CS		
Device Display Language								
German							BM1	
English							BM5	
French							BM4	
Spanish							BM3	
Italien							BM2	
Portuguese							BMA	
Chinese							BM6	
Documentation Language								
German								M1
English								M5
Language package Western Europe / Scandinavia (Languages: DA, ES, FR, IT, NL, PT, FI, SV)								MW
Language package Eastern Europe (Languages: EL, CS, ET, LV, LT, HU, HR, PL, SK, SL, RO, BG)								ME
Others								MZ

* Only with CoriolisMaster FCB450

... Flowmeter sensor

Additional ordering information						
CoriolisMaster FCB430 Coriolis Mass Flowmeter	**XX**	**XXX**	**XXX**	**XX**	**XXX**	**XXX**
CoriolisMaster FCB450 Coriolis Mass Flowmeter	**XX**	**XXX**	**XXX**	**XX**	**XXX**	**XXX**
Special Operation Mode						
Standard + DensiMass concentration measurement	N6*					
Standard + Filling application	N5*					
VeriMass - Meter verification	N7					
Pressure Rating of Sensor Secondary Containment						
Maximum burst pressure 6 MPa / 60 bar / 870 psi inclusive tower length extension		PR5				
Maximum burst pressure 10 MPa / 100 bar / 1450 psi inclusive tower length extension		PR6				
Maximum burst pressure 15 MPa / 150 bar / 2175 psi inclusive tower length extension		PR7				
Signal Cable Length						
Without signal cable			SC0			
5 m (approx. 15 ft)			SC1			
10 m (approx. 30 ft)			SC2			
20 m (approx. 66 ft)			SC4			
25 m (approx. 82 ft)			SC5			
30 m (approx. 98 ft)			SC6			
40 m (approx. 131 ft)			SC8			
50 m (approx. 164 ft)			SCA			
100 m (approx. 328 ft)			SCE			
150 m (approx. 492 ft)			SCG			
200 m (approx. 656 ft)			SCJ			
Others			SCZ			
Device Identification Plate						
Stainless steel plate with TAG no.				T1		
Others				TZ		
Ambient Temperature Range						
-40 ... 70 °C (-40 ... 158 °F)					TA9	
Extended Tower Length						
Tower length extension - meter insulation capability						TE1
Tower length extension - meter insulation capability with double sealing						TE2
Tower length extension -short- insulation capability						TE3

* Only with CoriolisMaster FCB450

CoriolisMaster FCH430, FCH450

Main ordering information											
CoriolisMaster FCH430 Coriolis Mass Flowmeter	**FCH430**	**XX**	**XX**	**XXXXX**	**XX**	XX	X	X	XX	XX	X
CoriolisMaster FCH450 Coriolis Mass Flowmeter	**FCH450**	**XX**	**XX**	**XXXXX**	**XX**	XX	X	X	XX	XX	X
Explosion Protection Certification											
General Purpose		Y0									
ATEX / IECEx (Zone 2 / 22)		A2									
ATEX / IECEx (Zone 1 / 21)		A1									
cFMus version Class 1 Div. 2 (Zone 2 / 21)		F2									
cFMus version Class 1 Div. 1 (Zone 1 / 21)		F1									
Connection Design / Connection Box Material / Cable Glands											
Integral, defined by Transmitter housing			Y0								
Remote / Aluminium / 1 x M20 x 1.5			U1								
Remote / Aluminium / 1 x NPT 1/2 in.			U2								
Remote / Stainless Steel / 1 x M20 x 1.5			A1								
Remote / Stainless Steel / 1 x NPT 1/2 in.			A2								
Meter Size / Connection Size											
DN 25 (1 in.) / DN 20 (3/4 in.)				025E1							
DN 25 (1 in.) / DN 25 (1 in.)				025R0							
DN 25 (1 in.) / DN 40 (1-1/2 in.)				025R2							
DN 50 (2 in.) / DN 40 (1-1/2 in.)				050E1							
DN 50 (2 in.) / DN 50 (2 in.)				050R0							
DN 50 (2 in.) / DN 65 (2-1/2 in.)				050R1							
DN 80 (3 in.) / DN 65 (2-1/2 in.)				080E1							
DN 80 (3 in.) / DN 80 (3 in.)				080R0							
DN 80 (3 in.) / DN 100 (4 in.)				080R1							
Process Connection Type											
Tri-Clamp acc. DIN 32676					T1						
Tri-Clamp acc. BPE					T3						
Food industry fittings acc. DIN 11851					F1						
Others					Z9						

Continued see next page

... Flowmeter sensor

Main ordering information						
CoriolisMaster FCH430 Coriolis Mass Flowmeter	**XX**	**X**	**X**	**XX**	**XX**	**X**
CoriolisMaster FCH450 Coriolis Mass Flowmeter	**XX**	**X**	**X**	**XX**	**XX**	**X**
Material of Wetted Parts						
Stainless steel polished 316L (1.4404 / 1.4435)	H2					
Flow Calibration						
Flow forward +/- 0.40 % of flow rate, Gas 1 % of flow rate		A*				
Flow forward +/- 0.25 % of flow rate, Gas 1 % of flow rate		B*				
Flow forward +/- 0.2 % of flow rate, Gas 1 % of flow rate		E*				
Forward +/-0.15% of flow rate, Gas 0.5 % of flow rate		C**				
Forward +/-0.10% of flow rate, Gas 0.5 % of flow rate		D**				
Flow forward / reverse +/- 0.40 % of flow rate, Gas 1 % of flow rate		J*				
Flow forward / reverse +/- 0.25 % of flow rate, Gas 1 % of flow rate		K*				
Flow forward / reverse +/- 0.20 % of flow rate, Gas 1 % of flow rate		N*				
Flow forward / reverse +/- 0.15 % of flow rate, Gas 0.5 % of flow rate		L**				
Flow forward / reverse +/- 0.10 % of flow rate, Gas 0.5 % of flow rate		M**				
Others		Z				
Density Calibration						
Density 10 g/l			1*			
Density 2 g/l			3**			
Density 1 g/l			4**			
Others			9			
Connection Design / Transmitter Housing Type / Transmitter Housing Material / Cable Glands						
Integral / Single-compartment / Aluminum / 3 x M20 x 1,5				S1		
Integral / Single-compartment / Aluminum / 3 x NPT 1/2 in.				S2		
Integral / Dual compartment / Aluminium / 3 x M20 x 1.5				D1		
Integral / Dual compartment / Aluminium / 3 x NPT 1/2 in.				D2		
Integral / Dual compartment / Aluminium / 3 x NPT 1/2 in. (Exd, XP)				D5		
Integral / Dual compartment / Aluminium / 3 x M20 x 1.5 (Exd, XP)				D6		
Remote / Not specified				Y0		
Others				Z9		
Outputs						
Current output 1 (active or passive), digitial output 1 & 2 (passive), HART					G0	
Current output 1 (active or passive), digitial output 1 & 2 (passive), 24 V DC transmitter loop power supply, HART					G1	
Current output 1 (active or passive), digitial output 1 & 2 (passive), current output 2 (passive), HART					G2	
Current output 1 (active or passive), digitial output 1 & 2 (passive), current output 2 (passive), current output 3 (passive), HART					G3	
Current output 1 (active or passive), digitial output 1 & 2 (passive), current output 2 (passive), 24 V DC transmitter loop power supply, HART					G4	
Current output 1 (active or passive), digital output 1 & 2 (passive), HART, MODBUS					M1	
Current output 1 (active or passive), digital output 1 & 2 (passive), HART, PROFIBUS DP					D1	
Without					Y0	
Power Supply						
100 ... 230 V AC						A
11 ... 30 V DC						C
Without						Y

* Only with CoriolisMaster FCH430

** Only with CoriolisMaster FCH450

Continued see next page

Additional ordering information

Additional ordering information							
CoriolisMaster FCH430 Coriolis Mass Flowmeter	**XX**	**XXX**	**XXX**	**XXX**	**XX**	**XX**	**XXX**
CoriolisMaster FCH450 Coriolis Mass Flowmeter	**XX**	**XXX**	**XXX**	**XXX**	**XX**	**XX**	**XXX**
Certificates							
Test report 2.2 acc. EN 10204	C1						
Material monitoring with inspection certificate 3.1 acc. EN 10204	C2						
Material monitoring NACE MR 01-75 with inspection certificate 3.1 acc. EN 10204	CN						
Declaration of compliance with the order 2.1 acc. EN 10204	C4						
Inspection certificate 3.1 acc. EN 10204 for visual, dimensional and functional test	C6						
Inspection certificate 3.1 acc. EN 10204 for positive material identification PMI (confirmation only)	CA						
Pressure test acc. AD2000	CB						
Test package (pressure test, non-destructive test, welder & welding procedure certificate)	CT						
Certificate of compliance for calibration 2.1 acc. EN 10204	CM						
Inspection certificate 3.1 acc. EN 10204 for positive material identification PMI (inlclusive heat analysis)	CR						
Others	CZ						
Custody Transfer Certification							
Custody transfer acc. MID (OIML)		CM1*					
Additional Output 1							
1 x Digital input			DRN				
1 x Digital output			DRG				
1 x Analog output passive (4 ... 20 mA)			DRA				
24 V DC transmitter loop power supply			DRT				
Additional Output 2							
1 x Digital input				DSN			
1 x Digital output				DSG			
1 x Analog output passive (4 ... 20 mA)				DSA			
1 x MODBUS				DRM			
1 x PROFIBUS DP				DRD			
Integrated Digital Display (LCD)							
No Display, with Blind Cover					L0		
With capacitive sensorbuttons / Display (TTG) / Glass cover					L2		
Functional Safety							
SIL2 certificate						CS	
Device Display Language							
German							BM1
English							BM5
French							BM4
Spanish							BM3
Italien							BM2
Portuguese							BMA
Chinese							BM6

* Only with CoriolisMaster FCH450

... Flowmeter sensor

Additional ordering information						
CoriolisMaster FCH430 Coriolis Mass Flowmeter	**XX**	**XX**	**XXX**	**XX**	**XXX**	**XXX**
CoriolisMaster FCH450 Coriolis Mass Flowmeter	**XX**	**XX**	**XXX**	**XX**	**XXX**	**XXX**
Documentation Language						
German	M1					
English	M5					
Language package Western Europe / Scandinavia (Languages: DA, ES, FR, IT, NL, PT, FI, SV)	MW					
Language package Eastern Europe (Languages: EL, CS, ET, LV, LT, HU, HR, PL, SK, SL, RO, BG)	ME					
Others	MZ					
Special Operation Mode						
Standard + Filling application		N5*				
Standard + DensiMass concentration measurement		N6*				
VeriMass - Meter verification		N7				
Signal Cable Length						
Without signal cable			SC0			
5 m (ca. 15 ft)			SC1			
10 m (ca. 30 ft)			SC2			
20 m (ca. 66 ft)			SC4			
25 m (ca. 82 ft)			SC5			
30 m (ca. 98 ft)			SC6			
40 m (ca. 131 ft)			SC8			
50 m (ca. 164 ft)			SCA			
100 m (ca. 328 ft)			SCE			
150 m (ca. 492 ft)			SCG			
200 m (ca. 656 ft)			SCJ			
Others			SCZ			
Device Identification Plate						
Stainless steel plate with TAG no.				T1		
Others				TZ		
Ambient Temperature Range						
-40 ... 70 °C (-40 ... 158 °F)					TA9	
Extended Tower Length						
Tower length extension - meter insulation capability						TE1
Tower length extension - meter insulation capability with double sealing						TE2
Tower length extension -short- insulation capability						TE3

* Only with CoriolisMaster FCH450

Transmitter

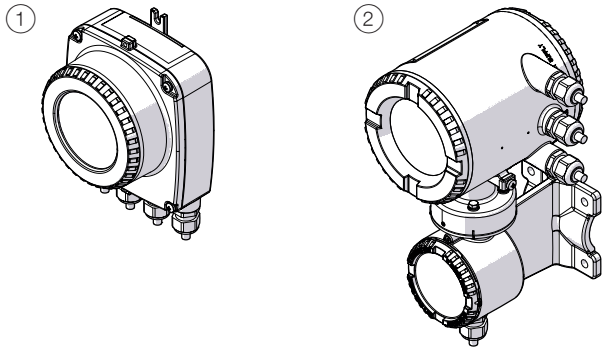

1 Single-compartment housing 2 Dual-compartment housing

Figure 19: Transmitter FCT4xx in field mount housing (remote mount design)

Features

- 4 to 20 mA current / HART 7.1 output.
- In the event of an alarm, current output can be adjusted to 21 to 23 mA (NAMUR NE43).
- Measuring range: can be adjusted between 0.1 to 1 x Q_{max}DN.
- Programmable digital output. Can be configured as a frequency, pulse or binary output.
- Two slots for optional plug-in cards for retrofitting additional current / digital outputs or a digital input.
- Parameterization by means of HART communication.
- Response time ≥ 1 s, as step function 0 to 99 % (corresponds to 5 τ)
- Damping: can be adjusted 0.2 to 100 s (1 τ).
- Low flow cut-off: 0 to 5 % for current and pulse output.
- Measuring medium parameters can be changed at any time (pressure and temperature influence, density, units, etc.).
- Simulation of current and binary output (manual process execution).

LCD indicator (option)

- Indicator for all measured values of CoriolisMaster (for example mass flow, volume flow rate, density, temperature and many others).
- Application-specific visualizations which the user can select. Four operator pages can be configured to display multiple values in parallel.
- Plain text fault diagnostics
- Menu-guided parameterization with four buttons.
- Easy Set-up function for fast commissioning.
- Operation through the front glass via capacitive buttons.

Diagnostic functions (option)

- VeriMass erosion monitor
- Monitoring function for current output 31 / 32 (analysis and read back of the output value).

For detailed information on optional diagnostic functions, consult the associated operating instruction OI/FCB400/FCH400.

... Transmitter

Optional plug-in cards

The transmitter has two slots (OC1, OC2) into which plug-in cards can be inserted to provide additional inputs and outputs.
The slots are located on the transmitter motherboard and can be accessed after removing the front housing cover.

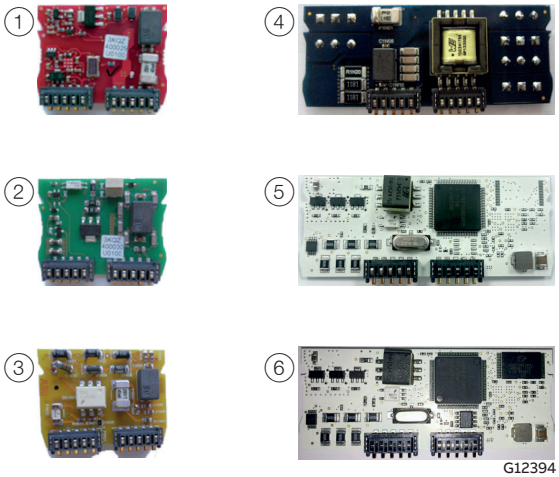

Figure 20: Plug-in cards

Plug-in card		Quantity *
1	Current output, 4 to 20 mA passive (red) Order no. 3KQZ400029U0100	2
2	Passive digital output (green) Order no. 3KQZ400030U0100	1
3	Passive digital input (yellow) 3KQZ400032U0100	1
4	24 V DC voltage supply (blue) 3KQZ400031U0100	1
5	Modbus RTU RS485 (white) Order no.: 3KQZ400028U0100	1
6	Profibus DP (white) Order no.: 3KQZ400027U0100	1

* The 'Number' column indicates the maximum number of plug-in cards of the same type that can be used.

Note

For an overview of the possible plug-in card combinations, refer to **Possible plug-in card combinations** on page 73.

IP rating

In accordance with EN60529: IP 65 / IP 67, NEMA 4X

Vibration

In accordance with EN 60068-2-6

- In the 10 to 58 Hz range, maximum deflection* 0.15 mm (0.006 in.)
- In the range of 58 to 150 Hz, maximum acceleration 1 g*

* Single peak load: 2 g

Approved relative humidity

In accordance with EN 60068-2-30

Temperature data

	Standard	Optional
Ambient temperature	−20 to 70 °C (−4 to 158 °F)	−40 to 70 °C (−40 to 158 °F)
Storage temperature	−20 to 70 °C (−4 to 158 °F)	—

Note

When operating below −20 °C (−4 °F), the LCD display can no longer be read and the electronics should be operated with as few vibrations as possible.
Full functionality is assured at temperatures above −20 °C (−4 °F).

Housing design

Integral mount design	
Housing	Cast aluminum, painted
Paint	≥ 80 µm thick, RAL 9002 (gray white)
Cable gland	Polyamide, M20 x 1.5 or ½ in. NPT
	Stainless steel*, M20 x 1.5 or ½ in. NPT
Remote mount design	
Housing	Cast aluminum, painted
Paint	≥ 80 µm thick, mid-section RAL 7012 (basalt gray), front cover / rear cover RAL 9002 (gray white)
Cable gland	Polyamide, M20 x 1.5 or ½ in. NPT
	Stainless steel*, M20 x 1.5 or ½ in. NPT
Weight	4.5 kg (9.92 lb)

* in the case of explosion-proof design for −40 °C (−40 °F) ambient temperature)

Signal cables

The signal cable used for the connection of the transmitter and sensor must fulfill at least the following technical specifications.

Cable specification	
Impedance	100 to 200 Ω
Withstand voltage	120 V
Outer diameter	6 to 12 mm (0.24 to 0.47 in.)
Cable design	Two wire pairs as a star-quad cable
Conductor cross-section	Length-dependent
Shield	Copper braid with approximately 85 % coverage
Temperature range	Application-dependent, for use in potentially explosive atmospheres, observe the information in **Temperature resistance for the connecting cable** on page 81!

Maximum signal cable length	
0.25 mm^2 (AWG 24)	50 m (164 ft)
0.34 mm^2 (AWG 22)	100 m (328 ft)
0.5 mm^2 (AWG 20)	150 m (492 ft)
0.75 mm^2 (AWG 19)	200 m (656 ft)

Recommended cables

It is recommended to use an ABB signal cable with the order number 3KQZ407123U0100 for standard applications.
The ABB signal cable fulfills the above-mentioned cable specification and can be utilized unrestrictedly up to an ambient temperature of $T_{amb.}$ = 80 °C (176 °F).

For marine applications, an appropriate certified signal cable must be used. ABB recommends the cable HELKAMA RFE-FRHF 2x2x0,75 QUAD 250V (HELKAMA order number 20522).

... Transmitter

Electrical connections

Electrical connection (HART protocol)

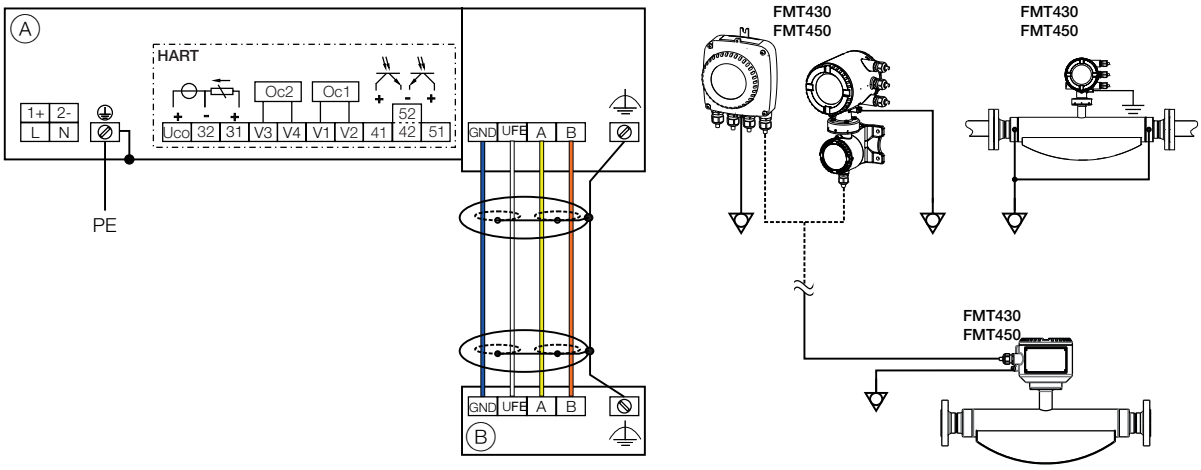

(A) Transmitter (B) Sensor

Figure 21: Electrical connection

Connections for the power supply

AC voltage	
Terminal	**Function / comments**
L	Phase
N	Neutral conductor
PE / ⏚	Protective earth (PE)
⏚	Potential equalization

DC voltage	
Terminal	**Function / comments**
1+	+
2-	-
PE / ⏚	Protective earth (PE)
⏚	Potential equalization

Connecting the signal cable

Only for remote mount design.
The sensor housing and transmitter housing must be connected to potential equalization.

Terminal	**Function / comments**
U_{FE}	Sensor power supply
GND	Ground
A	Data line
B	Data line
⏚	Functional earth / Shielding

Connections for inputs and outputs

Terminal	**Function / comments**
Uco / 32	**Current output 4 ... 20 mA- / HART output, active**
	or
31 / 32	**Current output 4 ... 20 mA- / HART output, passive**
41 / 42	**Passive digital output DO1**
51 / 52	**Passive digital output DO2**
V1 / V2	**Plug-in card, slot OC1**
V3 / V4	**Plug-in card, slot OC2**
	For details, see **Possible plug-in card combinations** on page 73.

Electrical data for inputs and outputs

Note

When using the device in potentially explosive atmospheres, note the additional connection data in **Use in potentially explosive atmospheres** on page 76!

Power supply L / N, 1+ / 2-

AC voltage	
Terminals	L / N
Operating voltage	100 to 240 V AC, 50 / 60 Hz
Power consumption	< 20 VA

DC voltage	
Terminals	1+ / 2-
Operating voltage	11 to 30 V DC
Power consumption	20 W

Current output 32 / Uco, 31 / 32 (basic device)

Can be configured for outputting mass flow, volume flow, density and temperature via on-site software.

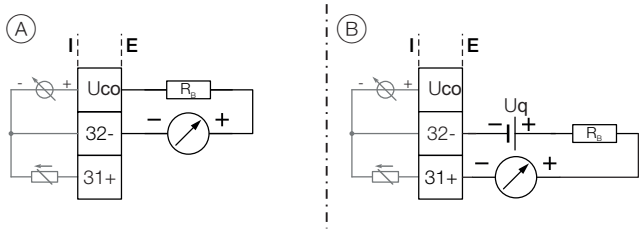

(A) Current output 31 / Uco, active (B) Current output 31 / 32 passive

Figure 22: (I = internal, E = external, R_B = load)

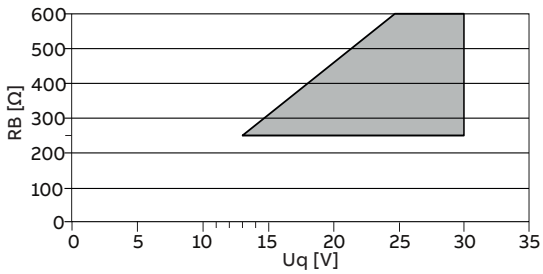

Permissible source voltage U_q for passive outputs in relation to load resistance R_B where I_{max} = 22 mA. = Permissible range

Figure 23: Source voltage for passive outputs

Current output	**Active**	**Passive**
Terminals	Uco / 32	31 / 32
Output signal	4 to 20 mA or 4 to 12 to 20 mA switchable	4 to 20 mA
Load R_B	250 Ω ≤ R_B ≤ 300 Ω	250 Ω ≤ R_B ≤ 600 Ω
Source voltage U_q*	–	13 V ≤ U_q ≤ 30 V
Measuring error	< 0.1 % of measured value	
Resolution	0.4 µA per digit	

* The source voltage U_q is dependent of the load R_B and must be placed in an additional area.

For information on communication via the HART protocol, refer to **HART Communication** on page 69.

... Transmitter

Current output Uco / 32 as loop power supply for digital output 41 / 42 or 51 / 52

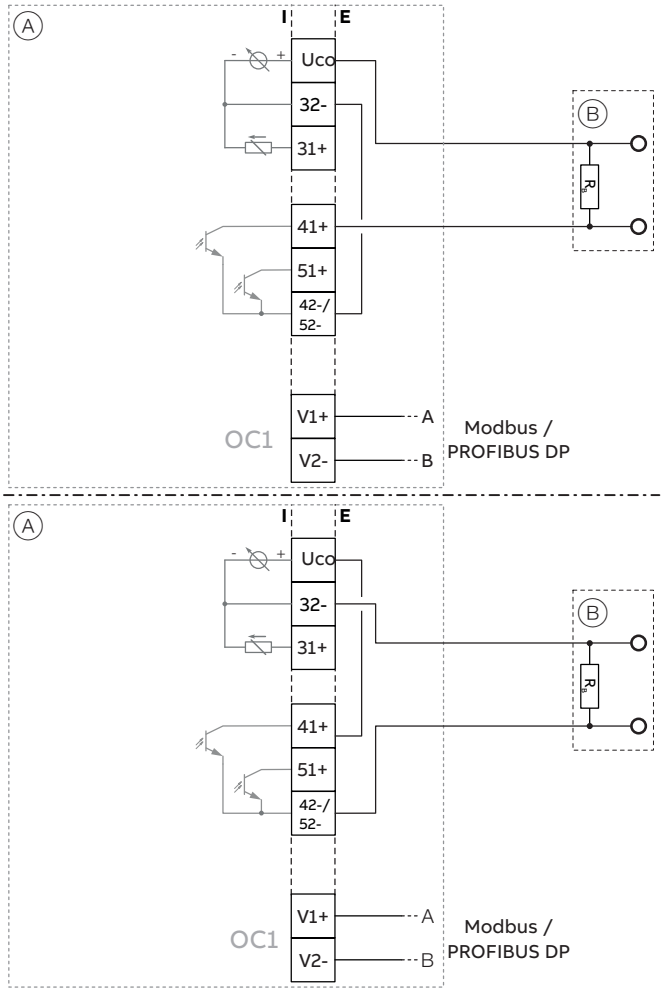

Ⓐ Transmitter FCx400

Ⓑ Customer wiring

OC1 Modbus / PROFIBUS DP plug-in card

R_B Load resistance

Figure 24: Current output Uco / 32 in power mode

In the case of digital communication via Modbus / PROFIBUS DP, the current output Uco / 32 can be switched to the 'Power Mode' operating mode through the software.
The current output 31/32/Uco is set permanently to 22.6 mA and no longer follows the selected process variable. HART communication is deactivated.
As a result, the passive digital outputs 41 / 42 or 51 / 52 can also be operated as active digital outputs.

The load resistance R_B needs to be integrated by the customer outside of the transmitter housing.

Loop power supply 24 V DC pperating mode	
Terminals	Uco / 32
Function	For active connection of passive outputs
Output Voltage	Load dependent, see **Figure 25**.
Load rating I_{max}	22.6 mA, permanently short circuit-proof

Table 1: Specification current output Uco / 32 in power mode

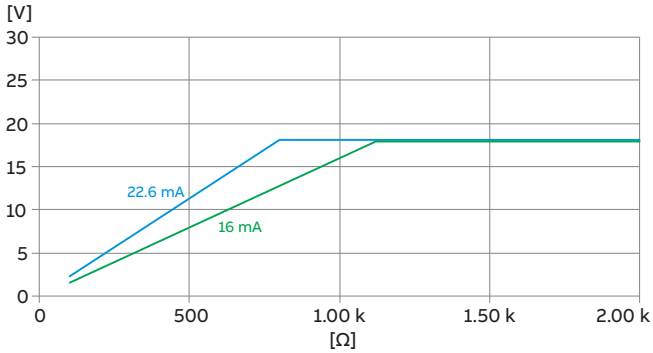

Figure 25: Output voltage dependent on load resistance

Digital output 41 / 42, 51 / 52 (basic device)

Can be configured as pulse, frequency or binary output via on-site software.

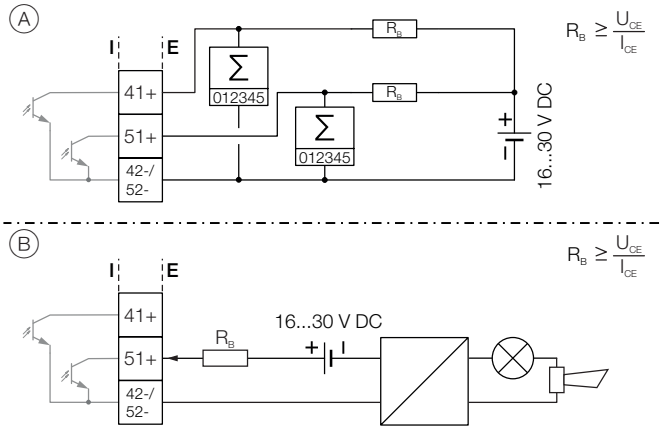

(A) Digital output 41 / 42, 51 / 52 passive as a pulse of frequency output

(B) Passive digital output 51 / 52 as binary output

Figure 26: (I = internal, E = external, R_B = load)

Pulse / frequency output (passive)	
Terminals	41 / 42, 51 / 52
Output 'closed'	$0\ V \leq U_{CEL} \leq 3\ V$ For f < 2.5 kHz: $2\ mA < I_{CEL} < 30\ mA$ For f > 2.5 kHz: $10\ mA < I_{CEL} < 30\ mA$
Output 'open'	$16\ V \leq U_{CEH} \leq 30\ V\ DC$ $0\ mA \leq I_{CEH} \leq 0.2\ mA$
f_{max}	10.5 kHz
Pulse width	0.1 to 2000 ms

Binary output (passive)	
Terminals	41 / 42, 51 / 52
Output 'closed'	$0\ V \leq U_{CEL} \leq 3\ V$ $2\ mA \leq I_{CEL} \leq 30\ mA$
Output 'open'	$16\ V \leq U_{CEH} \leq 3\ V\ DC$ $0\ mA \leq I_{CEH} \leq 0.2\ mA$
Switching function	Can be configured using software.

Note

- Terminals 42 / 52 have the same potential. Digital outputs DO 41 / 42 and DO 51 / 52 are not electrically isolated from each other. If an additional electrically isolated digital output is required, a corresponding plug-in module must be used.
- If you are using a mechanical counter, we recommend setting a pulse width of ≥ 30 ms and a maximum frequency of $f_{max} \leq 30$ Hz.

Modbus / PROFIBUS DP interface V1 / V2 (plug-in card)

A Modbus or PROFIBUS DP interface can be implemented by using the 'Modbus RTU, RS485 (white)' or 'PROFIBUS DP, RS485 (white)' plug-in cards.

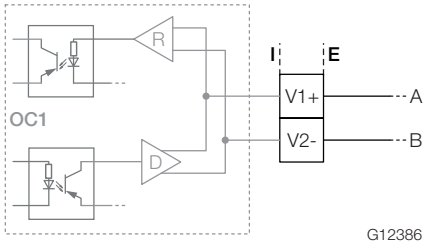

Figure 27: Plug-in card as a Modbus / PROFIBUS DP interface (I = internal, E = external)

The corresponding plug-in card can only be used in slot OC1.

For information on communication through the Modbus or PROFIBUS DP protocols, refer to chapters **Modbus-Communication** on page 70 and **PROFIBUS DP communication** on page 71.

... Transmitter

Current output V1 / V2, V3 / V4 (plug-in module)
Up to two additional plug-in modules can be implemented via the 'Passive current output (red)' option module.
Can be configured for outputting mass flow, volume flow, density and temperature via on-site software.

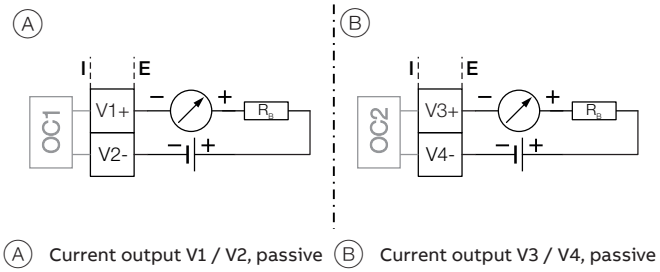

(A) Current output V1 / V2, passive (B) Current output V3 / V4, passive

Figure 28: (I = internal, E = external, R_B = load)

The plug-in module can be used in slot OC1 **and** OC2.

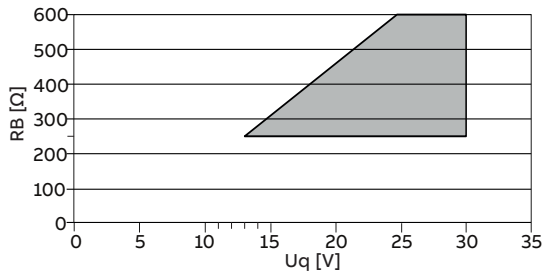

Permissible source voltage U_q for passive outputs in relation to load resistance R_B where Imax = 22 mA. = Permissible range

Figure 29: Source voltage for passive outputs

Passive current output	
Terminals	V1 / V2, V3 / V4
Output signal	4 to 20 mA
Load R_B	250 Ω ≤ R_B ≤ 600 Ω
Source voltage U_q*	13 V ≤ U_q ≤ 30 V
Measuring error	< 0.1 % of measured value
Resolution	0.4 µA per digit

* The source voltage U_q is dependent of the load R_B and must be placed in an additional area.

Digital output V1 / V2, V3 / V4 (plug-in module)
An additional binary output can be implemented via the 'Passive digital output (green)' plug-in module.
Can be configured as an output for flow direction signaling, alarm output etc. via on-site software.

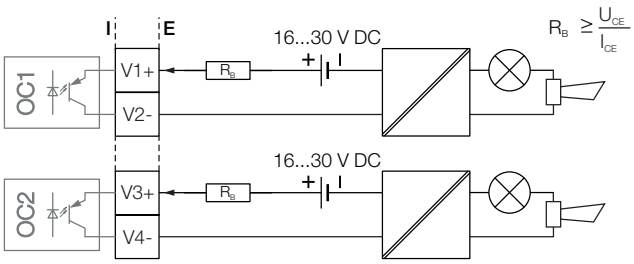

Figure 30: Plug-in card as binary output (I = internal, E = external, R_B = load)

The plug-in module can be used in slot OC1 **or** OC2.

Binary output (passive)	
Terminals	V1 / V2, V3 / V4
Output 'closed'	0 V ≤ U_{CEL} ≤ 3 V 2 mA < I_{CEL} < 30 mA
Output 'open'	16 V ≤ U_{CEH} ≤ 30 V DC 0 mA ≤ I_{CEH} ≤ 0.2 mA
Switching function	Can be configured using software.

Digital output V1 / V2, V3 / V4 (plug-in module)

A digital input can be implemented via the 'Passive digital input (yellow)' plug-in module.
Can be configured as an input for external counter reset, external output deactivation etc. via on-site software.

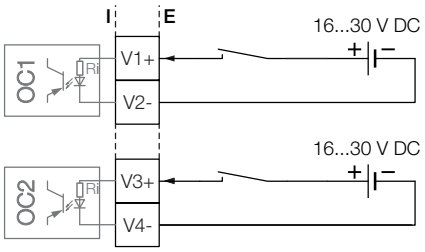

Figure 31: Plug-in card as digital input (I = internal, E = external)

The plug-in module can be used in slot OC1 **or** OC2.

Digital input	
Terminals	V1 / V2, V3 / V4
Input 'On'	16 V ≤ U_{KL} ≤ 30 V
Input 'Off'	0 V ≤ U_{KL} ≤ 3 V
Internal resistance R_i	6.5 kΩ
Function	Can be configured using software.

24 V DC loop power supply (plug-in module)

Use of the 'loop power supply (blue)' plug-in card allows a passive output on the transmitter to be used as an active output. See also **Connection examples** on page 67.

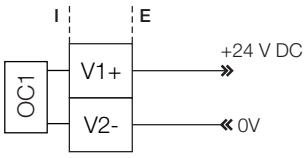

Figure 32: (I = Internal, E = External)

The plug-in module can only be used in slot OC1.

Loop power supply 24 V DC	
Terminals	V1 / V2
Function	For active connection of passive outputs
Output Voltage	24 V DC at 0 mA,
	17 V DC at 25 mA
Load rating I_{max}	25 mA, permanently short circuit-proof

Connection examples

Input and output functions are configured via the device software in accordance with the desired application.
Parameter description **in the operating instruction**

Active digital output 41 / 42, 51 / 52, V3 / V4

When the 'loop power supply 24 V DC (blue)' plug-in card is used, the digital outputs on the basic device and on the option modules can also be wired as active digital outputs.

Note

Each 'loop power supply (blue)' plug-in card must only power one output.
It must not be connected to two outputs (for example digital output 41 / 42 and 51 / 52)!

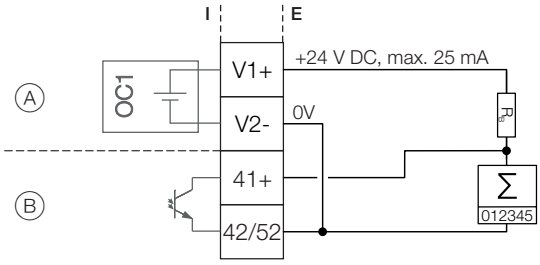

(A) 'Loop power supply (blue)' plug-in card in slot 1
(B) Digital output, digital output 41 / 42

Figure 33: Active digital output 41 / 42 (example)

The connection example shows usage for digital output 41 / 42; the same applies to usage for digital output 51 / 52.

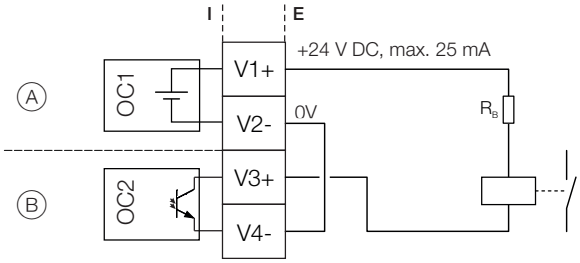

(A) 'Loop power supply (blue)' plug-in card in slot 1
(B) 'Digital output (green)' plug-in card in slot 2

Figure 34: Active digital output V3 / V4 (example)

... Transmitter

Digital output 41 / 42, 51 / 52 passive on distributed control system

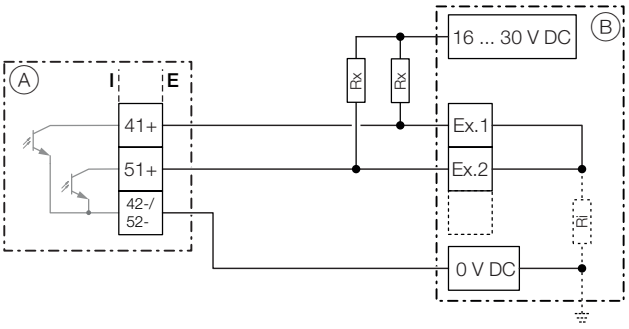

(A) Transmitter

(B) Distributed control system / Memory programmable controller

Ex. 1 Input 1

Ex. 2 Input 2

R_X Resistor for current limitation

R_I Distributed control system internal resistance

Figure 35: Digital output 41 / 42 on distributed control system (example)

The R_X resistors limit the maximum current through the optoelectronic coupler of the digital outputs in the transmitter.
The maximum permissible current is 25 mA. An R_X value of 1000 Ω / 1 W is recommended at a voltage level of 24 V DC.
The input on the distributed control system is reduced from 24 V DC to 0 V DC (falling edge) with '1' at the digital output.

Active current output V3 / V4

When the 'loop power supply 24 V DC, blue' plug-in card is used, the current output on the plug-in card can also be wired as the active current output.

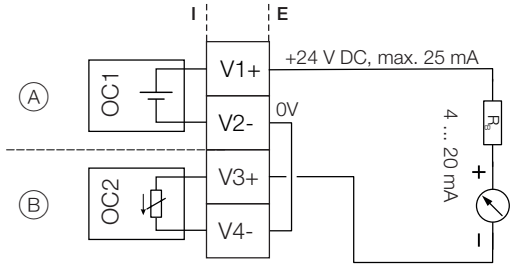

(A) 'Loop power supply (blue)' plug-in card in slot 1

(B) 'Passive current output (red)' plug-in card in slot 2

Figure 36: Active current output V3 / V4 (example)

Digital input V3 / V4 active

When the 'loop power supply 24 V DC, blue' plug-in card is used, the current output on the plug-in card can also be wired as the active current output.

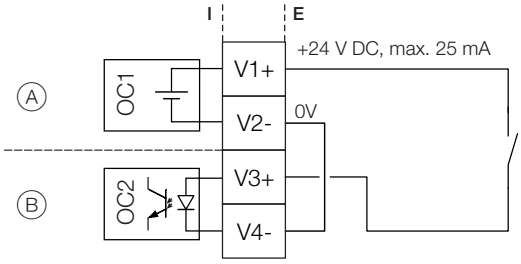

(A) 'Loop power supply (blue)' plug-in card in slot 1

(B) 'Passive digital input (yellow)' plug-in card in slot 2

Figure 37: Active digital output V3 / V4 (example)

Connection versions digital output 41 / 42, 51 / 52
Depending on the wiring of digital outputs DO 41 / 42 and 51 / 52, they can be used parallel or only individually. The electrical isolation between the digital outputs also depends on the wiring.

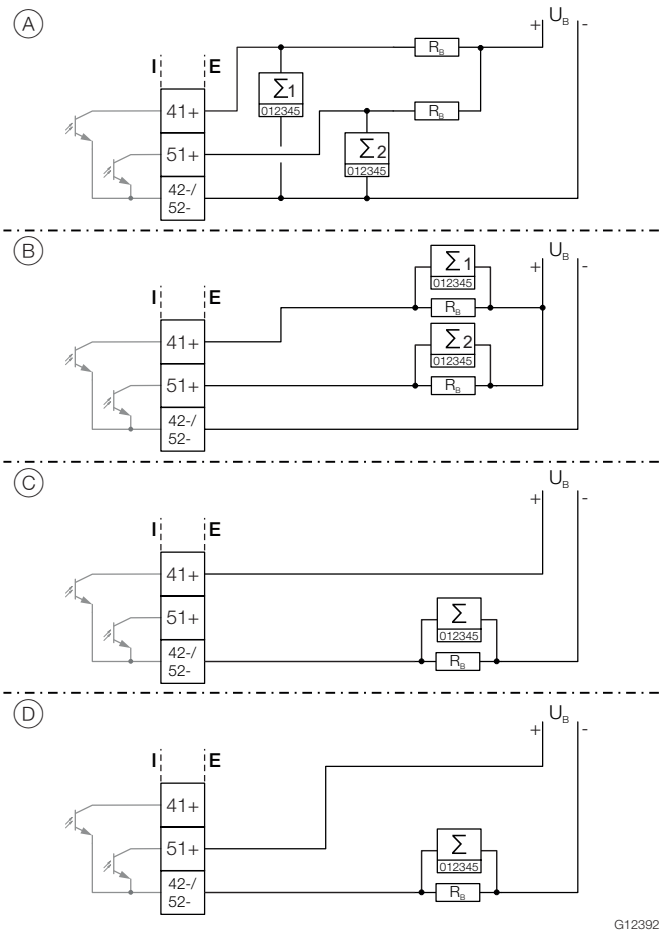

Figure 38: Connection versions digital output 41 / 42 and 51 / 52

	DO 41 / 42 and 51 / 52 can be used parallel	DO 41 / 42 and 51 / 52 electrically isolated
A	Yes	No
B	Yes	Yes
C	No, only DO 41 / 42 can be used	No
D	No, only DO 51 / 52 can be used	No

Table 2: Connection versions digital output

Digital communication

HART Communication

Note
The HART protocol is not secure, as such the intended application should be assessed to ensure that these protocols are suitable before implementation.

In connection with the DTM (Device Type Manager) available to the device, communication (configuration, parameterization) can be carried out FDT 0.98 or 1.2 (DSV401 R2).
Other tool or system integrations (e.g. g. Emerson AMS / Siemens PCS7) on request.
The necessary DTMs and additional files can also be downloaded from www.abb.com/flow.

HART output	
Terminals	Active: Uco / 32 Passive: 31 / 32
Protocol	HART 7.1
Transmission	FSK modulation on current output 4 to 20 mA in accordance with the Bell 202 standard
Baud rate	1200 baud
Signal amplitude	Maximum 1.2 mAss

Factory setting of the HART process variables

HART process variable	Process value
Primary Value (PV)	Q_m – Mass flow
Secondary Value (SV)	Q_v – Volume flow rate
Tertiary Value (TV)	p – Density
Quaternary Value (QV)	T_m – Measuring medium temperature

The process values of the HART variables can be set in the device menu.

... Transmitter

Modbus-Communication

Note
The Modbus protocol are not secure, as such the intended application should be assessed to ensure that these protocols are suitable before implementation.

Modbus is an open standard owned and administrated by an independent group of device manufacturers styled the Modbus Organization (www.modbus.org).
Using the Modbus protocol allows devices made by different manufacturers to exchange information via the same communication bus, without the need for any special interface devices to be used.

Modbus protocol	
Terminals	V1 / V2
Configuration	Via the Modbus interface or via the local operating interface in connection with Asset Vision Basic (DAT200) and a corresponding Device Type Manager (DTM)
Transmission	Modbus RTU - RS485 serial connection
Baud rate	2400, 4800, 9600, 19200, 38400, 56000, 57600, 115200 baud Factory setting: 9600 baud
Parity	None, even, odd Factory setting: odd
Stop bit	One, two Factory setting: One
IEEE format	Little endian, big endian Factory setting: Little endian
Typical response time	< 100 ms
Response delay time	0 to 200 milliseconds Factory setting: 10 milliseconds

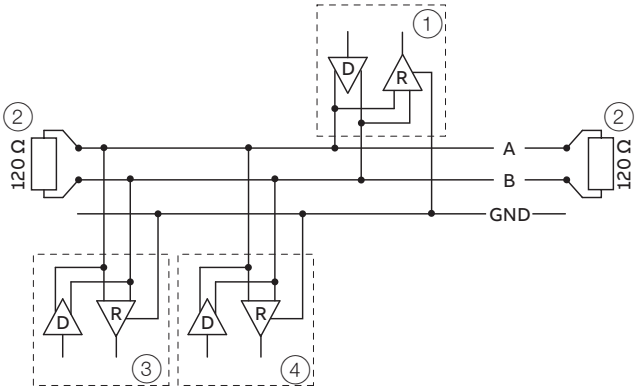

1 Modbus master
2 Terminating resistor
3 Modbus slave 1
4 Modbus slave n to 32

Figure 39: Communication with the Modbus protocol

Cable specification

The maximum permissible length is dependent on the baud rate, the cable (diameter, capacity and surge impedance), the number of loads in the device chain, and the network configuration (2-core or 4-core).

- At a baud rate of 9600 and with a conductor cross-section of at least 0.14 mm^2 (AWG 26), the maximum length is 1000 m (3280 ft).
- When using a 4-core cable as a 2-wire wiring system, the maximum length must be halved.
- The spur lines must be short, a maximum of 20 m (66 ft).
- When using a distributor with 'n' connections, each branch must have a maximum length of 40 m (131 ft) divided by 'n.'

The maximum cable length depends on the type of cable used. The following standard values apply:

- Up to 6 m (20 ft):
  cable with standard shielding or twisted-pair cable.
- Up to 300 m (984 ft):
  double twisted-pair cable with overall foil shielding and integrated earth cable.
- Up to 1200 m (3937 ft):
  double twisted-pair cable with individual foil shielding and integrated earth cables. Example: Belden 9729 or equivalent cable.

A category 5 cable can be used for Modbus RS485 up to a maximum length of 600 m (1968 ft). For the symmetrical pairs in RS485 systems, a surge impedance of more than 100 Ω is preferred, especially at a baud rate of 19200 and above.

PROFIBUS DP communication

Note
The PROFIBUS DP protocol are not secure, as such the intended application should be assessed to ensure that these protocols are suitable before implementation

PROFIBUS DP interface	
Terminals	V1 / V2
Configuration	Via the PROFIBUS DP interface or via the local operating interface in connection with Asset Vision Basic (DAT200) and a corresponding Device Type Manager (DTM)
Transmission	In accordance with IEC 61158-2
Baud rate	9.6 kbps, 19.2 kbps, 45.45 kbps, 93.75 kbps, 187.5 kbps, 500 kbps, 1.5 Mbps The baud rate is automatically detected and does not need to be configured manually
Device profile	PA Profile 3.02
Bus address	Address range 0 to 126 Factory setting: 126

For commissioning purposes, you will need a device driver in EDD (Electronic Device Description) or DTM (Device Type Manager) format plus a GSD file.

You can download EDD, DTM and GSD from www.abb.com/flow.

The files required for operation can also be downloaded from www.profibus.com

ABB provides three different GSD files which can be integrated in the system.

ID number	GSD file name	
0x9741	PA139741.gsd	2xAI, 1xTOT
0x9742	PA139742.gsd	3xAI, 1xTOT
0x3434	ABB_3434.gsd	8xAI, 3xTOT, 2xAO, 1xDI, 3xDO

Users decide at system integration whether to install the full range of functions or only part. Switching is made using the 'Ident Nr. Selector' parameter.

See also Parameter description **in the operating instruction** on page 88.

Limits and rules when using ABB fieldbus accessories

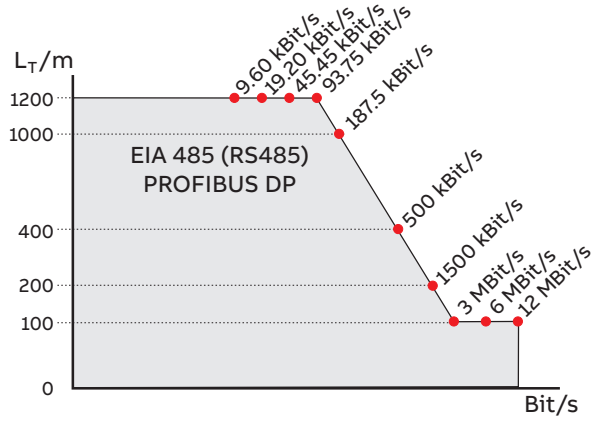

Figure 40: Bus cable length depends on the transmission rate

Pro PROFIBUS Line
(Line = Starts at DP Master and goes to last DP/PA Slave)

- Approximately 4 to 8 DP segments through the repeater (see repeater data sheets)
- Recommended DP transfer rate 500 to 1500 kBit/s
- The slowest DP node determines the transfer rate of the DP line
- Number of PROFIBUS DP and PA nodes ≤ 126 (addresses 0 to 125)

Per PROFIBUS DP segment

- Number of DP nodes ≤ 32
  (Node = Devices with / without PROFIBUS address)
- Bus termination required at the beginning and end of each DP segment!
- Trunk cable length (L_T) see diagram (length dependent on transfer rate)
- Cable length of at least 1 m between two DP nodes at ≥ 1500 kBit/s!
- Spur cable length (L_S), at ≤ 1500 kBit/s: LS ≤ 0.25 m, at > 1500 kBit/s: LS = 0.00 m!
- At 1500 kBit/s and ABB DP cable type A:
  – Sum of all spur cable lengths (L_S) ≤ 6.60 m, trunk cable length (L_T) > 6.60 m, total length = L_T+ (Σ L_S) ≤ 200 m, maximum 22 DP nodes (= 6.60 m / (0.25 m + 0.05 m spare))

... Transmitter

Dimensions

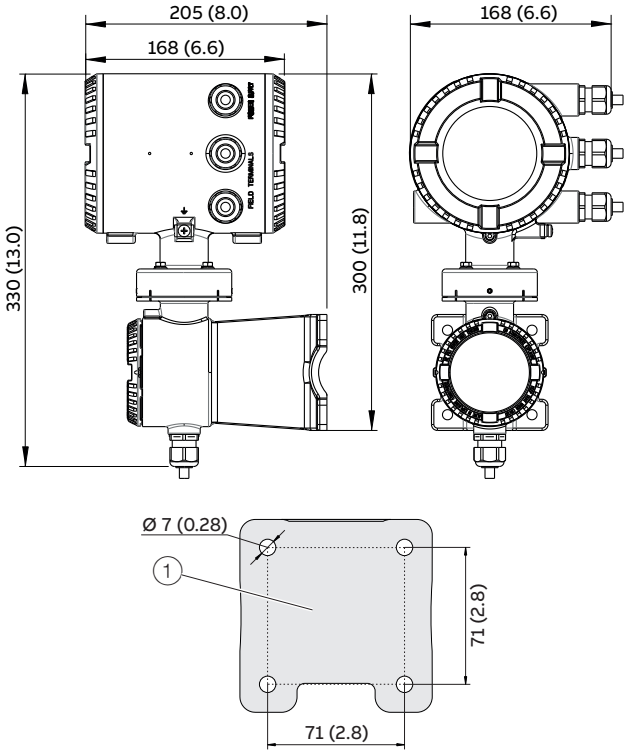

1. Hole pattern for mounting holes
2. Female thread (either ½ in NPT or M20 x 1.5), see model coding. In the case of a ½ in NPT, there is a plug instead of a cable gland.

Figure 41: Mounting dimensions dual-compartment housing

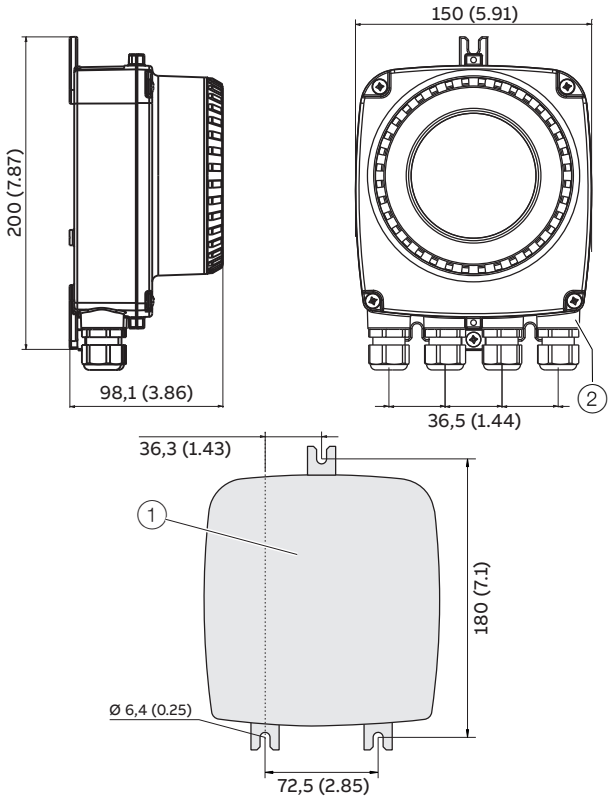

1. Hole pattern for mounting holes
2. Female thread (either ½ in NPT or M20 x 1.5), see model coding. In the case of a ½ in NPT, there is a plug instead of a cable gland.

Figure 42: Mounting dimensions single-compartment housing

Ordering information

Possible plug-in card combinations

The following table provides an overview of the possible plug-in card combinations that can be selected when ordering the device.

Main ordering information (outputs)	Additional ordering information		Slot OC1	Slot OC2
	Additional output 1	Additional output 2	Terminals V1 / V2	Terminals V3 / V4
G0	–	–	–	–
G1	–	–	Loop power supply 24 V DC (blue)	–
G2	–	–	–	Passive current output (red)
G3	–	–	Current output, 4 to 20 mA passive (red)	Current output, 4 to 20 mA passive (red)
G4	–	–	Loop power supply 24 V DC (blue)	Passive current output (red)
G0	DRT	–	Loop power supply 24 V DC (blue)	–
G0	DRT	DSN	Loop power supply 24 V DC (blue)	Passive digital input (yellow)
G0	DRT	DSG	Loop power supply 24 V DC (blue)	Passive digital output (green)
G0	DRT	DSA	Loop power supply 24 V DC (blue)	Current output, 4 to 20 mA passive (red)
G0	DRN	–	Passive digital input (yellow)	–
G0	DRN	DSG	Passive digital input (yellow)	Passive digital output (green)
G0	DRN	DSA	Passive digital input (yellow)	Current output, 4 to 20 mA passive (red)
G0	DRG	DSN	Passive digital output (green)	Passive digital input (yellow)
G0	DRG	DSA	Passive digital output (green)	Current output, 4 to 20 mA passive (red)
G0	DRA	DSA	Current output, 4 to 20 mA passive (red)	Current output, 4 to 20 mA passive (red)
G0	DRA	DSG	Current output, 4 to 20 mA passive (red)	Passive digital output (green)
G0	DRA	DSN	Current output, 4 to 20 mA passive (red)	Passive digital input (yellow)
G0	DRM	–	Modbus RTU RS485 (white)	–
G0	DRD	–	Profibus DP, RS485 (white)	–
G0	DRM	DSN	Modbus RTU RS485 (white)	Passive digital input (yellow)
G0	DRM	DSG	Modbus RTU RS485 (white)	Passive digital output (green)
G0	DRD	DSN	Profibus DP, RS485 (white)	Passive digital input (yellow)
G0	DRD	DSG	Profibus DP, RS485 (white)	Passive digital output (green)

... Transmitter

Note
For additional information on dependencies and restrictions, and for help on product selection, please refer to the Online Product Selection Assistant (PSA) at www.abb.us/flow-selector.

CoriolisMaster FCT430, FCT450 Coriolis Mass Flowmeter Transmitter

Main ordering information					
CoriolisMaster FCT430 Coriolis Mass Flowmeter Transmitter	**FCT430**	**XX**	**XX**	**XX**	**X**
CoriolisMaster FCT430 Coriolis Mass Flowmeter Transmitter	**FCT450**	**XX**	**XX**	**XX**	**X**
Explosion Protection Certification					
General Purpose		Y0			
ATEX / IECEx (Zone 2 / 22)		A2			
ATEX / IECEx (Zone 1 / 21)		A1			
cFMus version Class 1 Div. 2 (Zone 2 / 21)		F2			
cFMus version Class 1 Div. 1 (Zone 1 / 21)		F1			
Connection Design / Transmitter Housing Type / Transmitter Housing Material / Cable Glands					
Remote / Single-compartment / Aluminum / 4 x M20 x 1.5			W1		
Remote / Single-compartment / Aluminum / 4 x NPT 1/2 in.			W2		
Remote / Dual compartment, wall mounted / Aluminum / 4 x M20 x 1.5			R1		
Remote / Dual compartment, wall mounted / Aluminum / 4 x NPT 1/2 in.			R2		
Remote / Dual compartment, wall mounted / Aluminum / 4 x M20 x 1.5 (Exd, XP)			R5		
Remote / Dual compartment, wall mounted / Aluminum / 4 x NPT 1/2 in. (Exd, XP)			R6		
Others			Z9		
Outputs					
Current output 1 (active or passive), digital output 1 & 2 (passive), HART				G0	
Current output 1 (active or passive), digital output 1 & 2 (passive), 24 V DC transmitter loop power supply, HART				G1	
Current output 1 (active or passive), digital output 1 & 2 (passive), current output 2 (passive), HART				G2	
Current output 1 (active or passive), digital output 1 & 2 (passive), current output 2 (passive), current output 3 (passive), HART				G3	
Current output 1 (active or passive), digital output 1 & 2 (passive), current output 2 (passive), 24 V DC transmitter loop power supply, HART				G4	
Current output 1 (active or passive), digital output 1 & 2 (passive), HART, MODBUS				M1	
Current output 1 (active or passive), digital output 1 & 2 (passive), HART, PROFIBUS DP				D1	
Others				Z9	
Power Supply					
100 ... 230 V AC					A
11 ... 30 V DC					C

Additional ordering information

Additional ordering information											
CoriolisMaster FCT430 Coriolis Mass Flowmeter Transmitter	**XX**	**XX**	**XXX**	**XXX**	**XXX**	**XXX**	**XX**	**XX**	**XXX**	**XX**	**XX**
CoriolisMaster FCT450 Coriolis Mass Flowmeter Transmitter	**XX**	**XX**	**XXX**	**XXX**	**XXX**	**XXX**	**XX**	**XX**	**XXX**	**XX**	**XX**
Mounting Bracket Shape / Material											
For 2 in. pipe mounting / Carbon steel	B1										
Certificates											
Declaration of compliance with the order 2.1 acc. EN 10204		C4									
Inspection certificate 3.1 acc. EN 10204 for visual, dimensional and functional test		C6									
Ships Register Certifications											
DNVGL			CL1								
Custody Transfer Certification											
Custody transfer acc. MID (OIML)				CM1							
Additional Output 1											
1 x Digital input					DRN						
1 x Digital output					DRG						
1 x Analog output passive (4 ... 20 mA)					DRA						
24 V DC transmitter loop power supply					DRT						
Additional Output 2											
1 x Digital input						DSN					
1 x Digital output						DSG					
1 x Analog output passive (4 ... 20 mA)						DSA					
1 x MODBUS						DRM					
1 x PROFIBUS DP						DRD					
Integrated Digital Display (LCD)											
No Display, with Blind Cover							L0				
With capacitive sensorbuttons / Display (TTG) / Glass cover							L2				
Functional Safety											
SIL2 certificate								CS			
Device Display Language											
German									BM1		
English									BM5		
French									BM4		
Spanish									BM3		
Italien									BM2		
Portuguese									BMA		
Chinese									BM6		
Documentation Language											
German										M1	
English										M5	
Language package Western Europe / Scandinavia (Languages: DA, ES, FR, IT, NL, PT, FI, SV)										MW	
Language package Eastern Europe (Languages: EL, CS, ET, LV, LT, HU, HR, PL, SK, SL, RO, BG)										ME	
Others										MZ	
Device Identification Plate											
Stainless steel plate with TAG no.											T1

Use in potentially explosive atmospheres

Note
Further information on the approval of devices for use in potentially explosive atmospheres can be found in the type examination certificates or the relevant certificates at www.abb.com/flow.

Device overview

ATEX / IECEx

	Standard / No explosion protection		Zone 2, 21, 22		Zone 1, 21 (Zone 0)	
Model number	**FCx4xx Y0**		**FCx4xx A2**		**FCx4xx A1**	
Integral mount design • Standard • Zone 2, 21, 22 • Zone 1, 21 • Zone 0	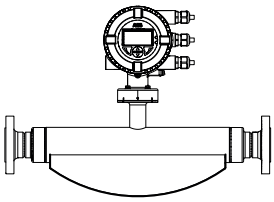		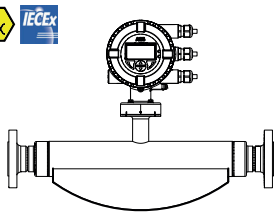		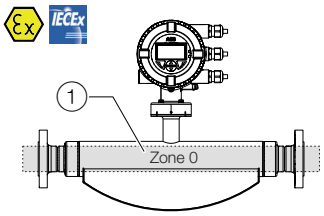	
Model number	**FCT4xx Y0**	**FCx4xx Y0**	**FCT4xx A2**	**FCx4xx A2**	**FCT4xx A1**	**FCx4xx A1**
Remote mount design Transmitter and flowmeter sensor • Standard • Zone 2, 21, 22 • Zone 1, 21 • Zone 0	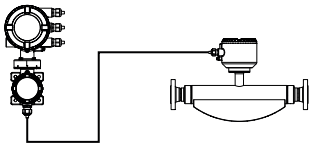		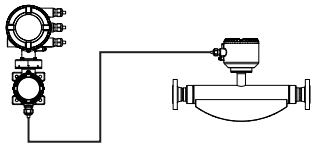		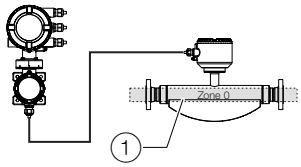	
Model number	**FCT4xx Y0**		**FCT4xx A2**		**FCx4xx A1**	
Remote mount design Transmitter • Standard • Zone 2, 21, 22 Sensor • Zone 1, 21 • Zone 0			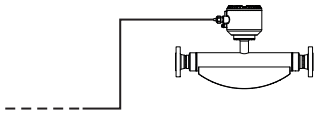		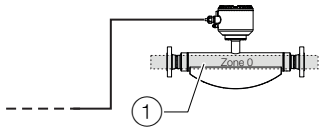	
Model number	**–**		**FCT4xx A2**		**FCx4xx A1**	
Remote mount design Transmitter • Zone 2, 21, 22 Sensor • Zone 1, 21	–				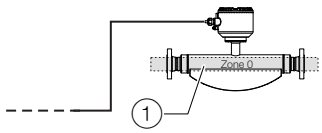	

(1) Zone 0 within the meter tube

cFMus

	Standard / No explosion protection		Class I Div. 2 / Zone 2		Class I Div. 1 / Zone 1 (Zone 0)	
Model number	**FCx4xx Y0**		**FCx4xx F2**		**FCx4xx F1**	
Integral mount design • Standard • Div. 2 / Zone 2 • Div. 1 / Zone 1 (Zone 0)	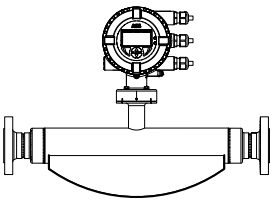		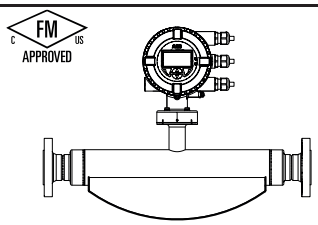		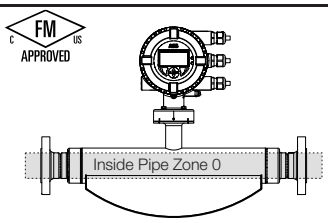	
Model number	**FCT4xx Y0**	**FCx4xx Y0**	**FCT4xx F2**	**FCx4xx F2**	**FCT4xx F1**	**FCx4xx F1**
Remote mount design Transmitter and flowmeter sensor • Div. 2 / Zone 2 • Div. 1 / Zone 1 (Zone 0)	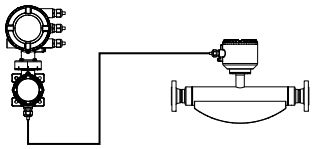		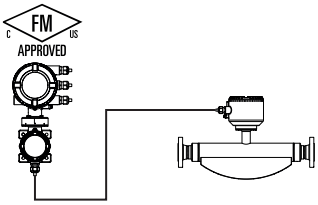		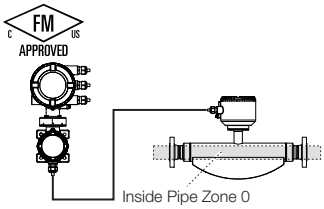	
Model number	**FCT4xx Y0**		**FCT4xx F2**		**FCx4xx F1**	
Remote mount design Transmitter • Standard Sensor • Div. 2 / Zone 2 • Div. 1 / Zone 1 (Zone 0)			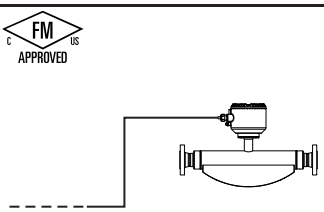		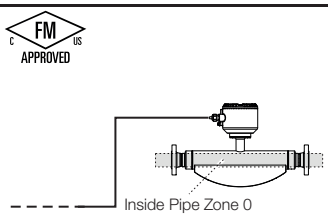	
Model number	**–**		**FCT4xx F2**		**FCx4xx F1**	
Remote mount design Transmitter • Div. 2 / Zone 2 Sensor • Div. 1 / Zone 1 (Zone 0)	–		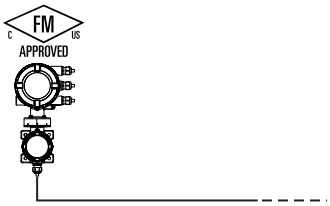		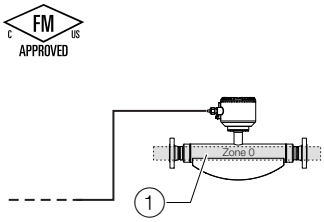	

(1) Zone 0 within the meter tube

... Use in potentially explosive atmospheres

Ex marking

Description of model numbers

Each device design has a specific model number. The parts of the model number relating to explosion protection are listed in the following table. The complete model number key, as well as the selection possibilities are described in **Ordering information** on page 49 (sensor) and **Ordering information** on page 73 (transmitter).

Basic model										
	Fca4c	XX	XX	f	g	h	i	j	XX	l	m
Explosion protection											
Design / terminal box material / cable glands											
Nominal diameter / nominal connection diameter											
Process connection											
Material for wetted parts											
Flow rate calibration											
Density calibration											
Design / transmitter housing / transmitter housing material / cable gland											
Outputs											
Power supply											

ATEX / IECEx

Model number and brief description in Zone 2, 21
FCa4c – A2Y0fghijD
Integral mount design with dual-compartment housing
FCa4c – A2efghijY
Sensor in remote mount design with dual-compartment housing
FCT4c – A2R
Sensor in remote mount design with dual-compartment housing
Ex marking
II 3 G Ex nA IIC T6…T1 Gc
II 2 D Ex tb IIIC T80°C Db
Certificate
• ATEX: FM15ATEX0014X, FM15ATEX0016X
• IECEx: IECEx FME 15.0005X

Model number, brief description and marking in Zone 1, 21
FCa4c – A1Y0fghijDx (x = 1 to 4)
Integral mount design with dual-compartment housing
II 1/2 (1) G Ex d e ia mb [ia Ga] IIC T6…T1 Gb
II 2 (1) D Ex ia tb [ia Da] IIIC T80°C Db
FCa4c – A1Y0fghijDx (x = 5 to 8)
Integral mount design with dual-compartment housing (flameproof enclosure ‘Ex d’)
II 1/2 (1) G Ex d ia mb [ia Ga] IIB+H2 T6...T1 Gb
II 2 (1) D Ex ia tb [ia Da] IIIC T80°C Db
FCa4c – A1efghijY
Sensor in remote mount design with dual-compartment housing
II 1/2 G Ex e ia mb IIB+H2 T6…T1 Ga/Gb
II 2 D Ex ia tb IIIC T80°C Db
FCT4c – A1R (x = 1 to 4)
Sensor in remote mount design with dual-compartment housing
II 2 (1) G Ex d e ia mb [ia Ga] IIC T6…T1 Gb
II 2 (1) D Ex ia mb tb [ia Da] IIIC T80°C Db
FCT4c – A1R (x = 5 to 8)
Transmitter in remote mount design with dual-compartment housing (flameproof enclosure ‘Ex d’)
II 2 (1) G Ex d ia mb [ia Ga] IIB+H2 T6…T1 Gb
II 2 (1) D Ex ia tb [ia Da] IIIC T80°C Db
Certificate
• ATEX: FM15ATEX0015X
• IECEx: IECEx FME 15.0005X

Note

- Depending on the design, a specific marking in accordance with ATEX or IECEx applies.
- ABB reserves the right to modify the Ex-marking. Refer to the name plate for the exact marking.

… Use in potentially explosive atmospheres

cFMus

Model number and brief description in Division 2	
FCa4c – F2Y0fghijD	Integral mount design with dual-compartment housing
FCa4c – F2efghijY	Sensor in remote mount design with dual-compartment housing
Design in accordance with ANSI / ISA 12.27.01 as ‘Single Seal Device’ or as ‘Dual Seal Device’ (option TE2)	
FCT4c – F2R	Sensor in remote mount design with dual-compartment housing
Ex marking	
NI: CL I,II,III Div 2, GPS ABCDEFG, T6…T1	DIP: CL II,III, Div 1, GPS EFG, T6
CL I, ZN 2, AEx nA IIC T6…T1	ZN 21, AEx ia tb IIIC T80°C
CL I, ZN 2, Ex nA IIC T6...T1	ZN 21,Ex ia tb IIIC T80°C
See handbook for temperature class information	
Certificate	
cFMus: 3050239	

Model number and brief description in Division 1	
FCa4c – F1Y0fghijDx (x = 1 to 4)	Integral mount design with dual-compartment housing
FCa4c – F1Y0fghijDx (x = 5 to 8)	Integral mount design with dual-compartment housing (Explosionproof ‘XP’).
Design in accordance with ANSI / ISA 12.27.01 as ‘Single Seal Device’ or as ‘Dual Seal Device’ (option TE2)	
XP-IS: CL I, Div 1, GPS ABCD,T6…T1 (USA)	XP-IS: CL I, Div 1, GPS BCD,T6…T1 (CAN)
DIP: CL II,III, Div 1, GPS EFG,T6	ZN 21, AEx ia tb IIIC T80°C
CL I, ZN 1, AEx d ia IIC T6…T1	ZN 21, Ex ia tb IIIC T80°C
CL I, ZN 1, Ex d ia IIB+H2 T6…T1	
See handbook for temperature class information and installation drawing 3KXF000028G0009	
FCa4c – F1efghijY	Sensor in remote mount design with dual-compartment housing
Design in accordance with ANSI / ISA 12.27.01 as ‘Single Seal Device’ or as ‘Dual Seal Device’ (option TE2)	
XP-IS: CL I, Div 1, GPS BCD T6…T1	DIP: CL II,III, Div 1, GPS EFG,T6
CL I, ZN 1, AEx d ia IIB+H2 T6…T1	ZN 21, AEx ia tb IIIC T80°C
CL I, ZN 1, Ex d ia IIB+H2 T6…T1	ZN21, Ex ia tb IIIC T80°C
See handbook for temperature class information and installation drawing 3KXF000028G0009	
FCT4c – F1Rx (x = 1 to 4)	Sensor in remote mount design with dual-compartment housing
FCT4c – F1Rx (x = 5 to 8)	Sensor in remote mount design with dual-compartment housing (Explosionproof ‘XP’).
XP-IS: CL I, Div 1, GPS BCD,T6…T1 (USA)	XP-IS: CL I, Div 1, GPS BCD,T6…T1 (CAN)
DIP: CL II,III, Div 1, GPS EFG, T6	ZN 21, AEx ia tb IIIC T80°C
CL I, ZN 1, AEx d ia IIB+H2 T6…T1	ZN 21,Ex ia tb IIIC T80°C
CL I, ZN 1, Ex d ia IIB+H2 T6…T1	
See handbook for temperature class information and installation drawing 3KXF000028G0009	
Certificate	
cFMus: 3050239	

Note

- Depending on the design, a specific marking in accordance with FM applies.
- ABB reserves the right to modify the Ex-marking. Refer to the name plate for the exact marking.

Temperature data

Temperature resistance for the connecting cable

The temperature at the cable entries of the device is dependent on the measuring medium temperature T_{medium} and the ambient temperature $T_{amb.}$.
For the electrical connection of the device, use only cables with sufficient temperature resistance in accordance with the following table.

Device in integral mount design	
$T_{amb.}$	Temperature resistance
≤ 50 °C (≤ 122 °F)	≥ 60 °C (≥ 140 °F)
≤ 60 °C (≤ 140 °F)	≥ 70 °C (≥ 158 °F)
≤ 70 °C (≤ 158 °F)	≥ 80 °C (≥ 176 °F)

Model in remote mount design	
$T_{amb.}$	Temperature resistance
≤ 50 °C (≤ 122 °F)	≥ 70 °C (≥ 158 °F)
≤ 60 °C (≤ 140 °F)	≥ 80 °C (≥ 176 °F)
≤ 70 °C (≤ 158 °F)	≥ 90 °C (≥ 194 °F)

For sensors in remote mount design, the wires in the connection box must be additionally insulated with the enclosed silicone hoses starting from ambient temperatures of $T_{amb.}$ ≥ 60 °C (≥ 140 °F).

Sensor in remote mount design

Environmental and process conditions for model FCx4xx...			
Ambient temperature		Measuring medium temperature	IP rating / NEMA rating
$T_{amb.}$	$T_{amb.}$, optional	T_{medium}	
-20 to 70 °C (-4 to 158 °F)	−40 to 70 °C (−40 to 158 °F)	−40 to 205 °C (−40 to 400 °F)	IP 65, IP 67, IP 68 and NEMA 4X / type 4X

Measuring medium temperature (Ex data) for model FCx4xx-A1... in Zone 1, Division 1					
Ambient temperature $T_{amb.}$	≤ 30 °C (≤ 86 °F)	≤ 40 °C (≤ 104 °F)	≤ 50 °C (≤ 122 °F)	≤ 60 °C (≤ 140 °F)	≤ 70 °C(≤ 158 °F)
Temperature class	Maximum permissible measuring medium temperature T_{medium}				
T1	205 °C (400 °F)	205 °C (400 °F)	205 °C (400 °F)	205 °C (400 °F)	205 °C (400 °F)
T2	205 °C (400 °F)	205 °C (400 °F)	205 °C (400 °F)	205 °C (400 °F)	205 °C (400 °F)
T3	195 °C (383 °F)	195 °C (383 °F)	195 °C (383 °F)	195 °C (383 °F)	195 °C (383 °F)
T4	130 °C (266 °F)	130 °C (266 °F)	130 °C (266 °F)	130 °C (266 °F)	130 °C (266 °F)
T5	95 °C (203 °F)	95 °C (203 °F)	95 °C (203 °F)	95 °C (203 °F)	95 °C (203 °F)
T6	80 °C (176 °F)	80 °C (176 °F)	80 °C (176 °F)	80 °C (176 °F)	–

Measuring medium temperature (Ex data) for model FCx4xx-A2... in Zone 2, Division 2					
Ambient temperature $T_{amb.}$	≤ 30 °C (≤ 86 °F)	≤ 40 °C (≤ 104 °F)	≤ 50 °C (≤ 122 °F)	≤ 60 °C (≤ 140 °F)	≤ 70 °C (≤ 158 °F)
Temperature class	Maximum permissible measuring medium temperature T_{medium}				
T1	205 °C (400 °F)	205 °C (400 °F)	205 °C (400 °F)	205 °C (400 °F)	205 °C (400 °F)
T2	205 °C (400 °F)	205 °C (400 °F)	205 °C (400 °F)	205 °C (400 °F)	205 °C (400 °F)
T3	195 °C (383 °F)	195 °C (383 °F)	195 °C (383 °F)	195 °C (383 °F)	195 °C (383 °F)
T4	130 °C (266 °F)	130 °C (266 °F)	130 °C (266 °F)	130 °C (266 °F)	130 °C (266 °F)
T5	95 °C (203 °F)	95 °C (203 °F)	95 °C (203 °F)	–	–
T6	80 °C (176 °F)	–	–	–	–

... Use in potentially explosive atmospheres

Sensor in integral mount design

Environmental and process conditions for model FCx4xx...			
Ambient temperature		**Measuring medium temperature**	**IP rating / NEMA rating**
$T_{amb.}$	**T_{amb}, optional**	**T_{medium}**	
-20 to 70 °C (-4 to 158 °F)	-40 to 70 °C (-40 to 158 °F)	-40 to 205 °C (-40 to 400 °F)	IP 65, IP 67, and NEMA 4X / Type 4X

Measuring medium temperature (Ex data) for model FCx4xx-A1... in Zone 1, Division 1					
Ambient temperature $T_{amb.}$	≤ 30 °C (≤ 86 °F)	≤ 50 °C (≤ 122 °F)	≤ 60 °C (≤ 140 °F)	≤ 65 °C (≤ 149 °F)	≤ 70 °C (≤ 158 °F)
Temperature class	**Maximum permissible measuring medium temperature T_{medium}**				
T1	205 °C (400 °F)	205 °C (400 °F)	205 °C (400 °F)	205 °C (400 °F)	205 °C (400 °F)
T2	205 °C (400 °F)	205 °C (400 °F)	205 °C (400 °F)	205 °C (400 °F)	205 °C (400 °F)
T3	195 °C (383 °F)	195 °C (383 °F)	195 °C (383 °F)	195 °C (383 °F)	195 °C (383 °F)
T4	130 °C (266 °F)	130 °C (266 °F)	130 °C (266 °F)	130 °C (266 °F)	130 °C (266 °F)
T5	95 °C (203 °F)	95 °C (203 °F)	95 °C (203 °F)	95 °C (203 °F)	95 °C (203 °F)
T6	80 °C (176 °F)	80 °C (176 °F)	80 °C (176 °F)	80 °C (176 °F)	80 °C (176 °F)

Measuring medium temperature (Ex data) for model FCx4xx-A2... in Zone 2, Division 2					
Ambient temperature $T_{amb.}$	≤ 30 °C (≤ 86 °F)	≤ 40 °C (≤ 104 °F)	≤ 50 °C (≤ 122 °F)	≤ 60 °C (≤ 140 °F)	≤ 70 °C (≤ 158 °F)
Temperature class	**Maximum permissible measuring medium temperature T_{medium}**				
T1	205 °C (400 °F)	205 °C (400 °F)	205 °C (400 °F)	205 °C (400 °F)	205 °C (400 °F)
T2	205 °C (400 °F)	205 °C (400 °F)	205 °C (400 °F)	205 °C (400 °F)	205 °C (400 °F)
T3	195 °C (383 °F)	195 °C (383 °F)	195 °C (383 °F)	195 °C (383 °F)	195 °C (383 °F)
T4	130 °C (266 °F)	130 °C (266 °F)	130 °C (266 °F)	130 °C (266 °F)	130 °C (266 °F)
T5	95 °C (203 °F)	95 °C (203 °F)	–	–	–
T6	80 °C (176 °F)	–	–	–	–

Electrical data

Standard / No explosion protection	**Zone 2, 21**	**Zone 1, 21 (Zone 0)**
	Division 2 and Zone 2, 21	**Division 2 and Zone 1, 21**
ATEX: – **IECEx:** –	**ATEX:** II 3 G & II 2 D **IECEx:** Gc & Db	**ATEX:** II 1/2 (1) G & II 2 (1) D II 1/2 G & II 2 D II 2 (1) G & II 2 (1) D **IECEx:** (Ga) Gb & (Da) Db Ga/Gb & Db (Ga) Gb & (Da) Db
USA: – **Canada:** –	**USA:** NI & DIP AEx nA & AEx tb **Canada:** Non-Incendive & Dust Ignition Proof Ex nA & Ex tb	**USA:** XP-IS & DIP AEx d ia & AEx ia tb **Canada:** XP-IS & DIP Ex d ia & Ex ia tb
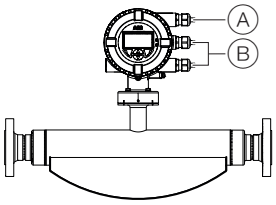		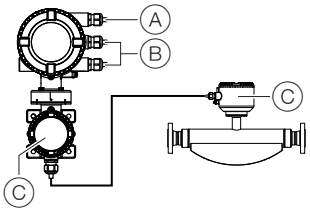
Ⓐ Power supply	Ⓑ Inputs / outputs, communication	Ⓒ Signal cable (remote mount design only)
• Type of protection ATEX / IECEx: Increased safety ‘Ex e’ • Type of protection USA / Canada: ‘non IS’ • Maximum 250 Vrms • Terminals: 1+, 2-, L, N, ⏚	• Type of protection ATEX / IECEx: Either increased safety ‘Ex e’ or intrinsically safe ‘Ex ia’ • Type of protection USA / Canada: Either ‘non IS’ or ‘intrinsically safe IS’. • When installing in ‘Ex ia’ or ‘IS’, suitable intrinsically safe isolation amplifiers must be used for the connection. • Terminals: 31, 32, Uco, V1, V2, V3, V4, 41, 42, 51, 52	• Terminals: A, B, UFE, GRN • Type of protection ATEX / IECEx: Increased safety ‘Ex e’ • Type of protection USA / Canada: ‘non IS’

Note
When installing in ‘Ex ia’ or ‘IS’ type of protection, the type of protection is determined by the type of electrical connection. The information in ‘Changing the type of protection’ **in the operating instruction** must be observed when changing the type of protection!

... Use in potentially explosive atmospheres

Zone 2, 21 and Division 2

Model: FCx4xx-A2, FCx4xx-F2				
Outputs on basic device	**Operating values (general)**		**Type of protection – 'nA' / 'NI'**	
	U_N	I_N	U_N	I_N
Active current / HART output 31 / U_{CO} Terminals 31 / U_{CO}	30 V	30 mA	30 V	30 mA
Passive current / HART output 31 / 32 Terminals 31 / 32	30 V	30 mA	30 V	30 mA
Digital output 41 / 42, active* Terminals 41 / 42 and V1 / V2*	30 V	30 mA	30 V	30 mA
Passive digital output 41 / 42 Terminals 41 / 42	30 V	25 mA	30 V	25 mA
Digital output 51 / 52, active* Terminals 51 / 52 and V1 / V2*	30 V	30 mA	30 V	30 mA
Passive digital output 51 / 52 Terminals 51 / 52	30 V	30 mA	30 V	30 mA

All outputs are electrically isolated from each other and from the power supply.
Digital outputs 41 / 42 and 51 / 52 are not electrically isolated from each other.
Terminals 42 / 52 have the same potential.

Model: FCx4xx-A2, FCx4xx-F2				
Inputs and outputs with optional plug-in cards	**Operating values (general)**		**Type of protection – 'nA' / 'NI'**	
	U_N	I_N	U_N	I_N
Current output V3 / V4, active* Terminals V3 / V4 and V1 / V2*	30 V	30 mA	30 V	30 mA
Current output V1 / V2, passive** **Current output V3 / V4, passive**** Terminals V1 / V2** or V3 / V4**	30 V	30 mA	30 V	30 mA
Digital output V3 / V4, active* Terminals V3 / V4 and V1 / V2*	30 V	25 mA	30 V	25 mA
Digital output V1 / V2, passive** **Digital output V3 / V4, passive**** Terminals V1 / V2** or V3 / V4**	30 V	30 mA	30 V	30 mA
Digital input V3 / V4, active* Terminals V3 / V4 and V1 / V2	30 V	3.45 mA	30 V	3.45 mA
Digital input V1 / V2, passive* **Digital input V3 / V4, passive*** Terminals V1 / V2** or V3 / V4**	30 V	3.45 mA	30 V	3.45 mA

* Only in conjunction with additional '24 V DC loop power supply (blue)' plug-in card in slot OC1.

** The terminal assignment depends on the model number or the slot assignments. For connection examples, see **Connection examples** on page 67.

Zone 1, 21 and Division 1

Model: FCx4xx-A1, FCx4xx-F1	**Type of protection**													
Outputs on basic device	**'e' / 'XP'**		**'ia' / 'IS'**											
	U_M [V]	I_M [A]	U_O [V]	U_I [V]	I_O [mA]	I_I [mA]	P_O [mW]	P_I [mW]	C_O [nF]	C_I [nF]	C_{OPA} [nF]	C_{IPA} [nF]	L_O [mH]	L_I [mH]
Active current / HART output 31 / U_{CO} Terminals 31 / U_{CO}	30	0.2	30	30	115	115	815	815	10	10	5	5	0.08	0.08
Passive current / HART output 31 / 32 Terminals 31 / 32	30	0.2	—	30	—	115	—	815	—	27	—	5	0.08	0.08
Digital output 41 / 42, active* Terminals 41 / 42 and V1 / V2*	30	0.1	27.8	30	119	30	826	225	20	20	29	29	0.22	0.22
Passive digital output 41 / 42 Terminals 41 / 42	30	0.1	—	30	—	30	—	225	—	27	—	5	—	0.08
Digital output 51 / 52, active* Terminals 51 / 52 and V1 / V2*	30	0.1	27.8	30	119	30	826	225	20	20	29	29	0.22	0.22
Passive digital output 51 / 52 Terminals 51 / 52	30	0.1	—	30	—	30	—	225	—	27	—	5	—	0.08

All outputs are electrically isolated from each other and from the power supply.
Digital outputs 41 / 42 and 51 / 52 are not electrically isolated from each other. Terminals 42 / 52 have the same potential.

Model: FCx4xx-A1, FCx4xx-F1	**Type of protection**													
Inputs and outputs with optional plug-in cards	**'e' / 'XP'**		**'ia' / 'IS'**											
	U_M [V]	I_M [A]	U_O [V]	U_I [V]	I_O [mA]	I_I [mA]	P_O [mW]	P_I [mW]	C_O [nF]	C_I [nF]	C_{OPA} [nF]	C_{IPA} [nF]	L_O [mH]	L_I [mH]
Current output V3 / V4, active* Terminals V3 / V4 and V1 / V2*	30	0.1	27.8	30	119	30	826	225	29	29	117	117	0.4	0.4
Current output V1 / V2, passive** **Current output V3 / V4, passive**** Terminals V1 / V2** or V3 / V4**	30	0.1	—	30	—	68	—	510	—	45	—	59	—	0.27
Digital output V3 / V4, active* Terminals V3 / V4 and V1 / V2*	30	0.1	27.8	30	119	68	826	225	17	17	31	31	0.4	0.4
Digital output V1 / V2, passive** **Digital output V3 / V4, passive**** Terminals V1 / V2** or V3 / V4**	30	0.1	—	30	—	30	—	225	—	13	—	16	—	0.27
Digital input V3 / V4, active* Terminals V3 / V4 and V1 / V2	30	0.1	27.8	30	119	3.45	826	25.8	17	17	31	31	0.4	0.4
Digital input V1 / V2, passive* **Digital input V3 / V4, passive*** Terminals V1 / V2** or V3 / V4**	30	0.1	—	30	—	3.45	—	25.8	—	13	—	16	—	0.27

* Only in conjunction with additional '24 V DC loop power supply (blue)' plug-in card in slot OC1.

** The terminal assignment depends on the model number or the slot assignments. For connection examples, see **Connection examples** on page 67.

... Use in potentially explosive atmospheres

Special connection conditions

Note
The AS plug-in card (24 V DC power supply) must only be used to power the internal inputs and outputs on the device.
It must not be used to power external circuits!

Note
If the protective earth (PE) is connected in the flowmeter's terminal box, you must ensure that no dangerous potential difference can arise between the protective earth (PE) and the potential equalization (PA) in areas with explosion risk.

Note
For devices with a power supply of 11 to 30 V DC, on-site external overvoltage protection must be provided.
It must be ensured that the overvoltage is limited to 140 % (= 42 V DC) of the maximum operating voltage.

The output circuits are designed so that they can be connected to both intrinsically-safe and non-intrinsically-safe circuits.

- It is not permitted to combine intrinsically safe and non-intrinsically safe circuits.
- On intrinsically-safe circuits, equipotential bonding must be in place along the entire length of the cable used for the digital outputs.
- The rated voltage of the non-intrinsically safe circuits is U_M = 30 V.
- Provided that the rated voltage U_M = 30 V is not exceeded if connections are established to non-intrinsically safe external circuits, intrinsic safety is preserved.
- The information in 'Changing the type of protection' **in the operating instruction** must be observed when changing the type of protection.

The concept of intrinsic safety allows several approved intrinsically safe devices to be interconnected without additional intrinsic safety installation checks, if the relevant installation standards are observed.

Devices connected to the relevant equipment must not be operated at over 250 V_{rms} AC or 250 V DC to ground.

Installation in accordance with ATEX or IECEx must comply with the applicable national and international standards and directives.

Installation in the USA or Canada must comply with ANSI / ISA RP 12.6, 'Installation of intrinsically safe systems for hazardous (classified) locations', the 'National Electrical Code (ANSI / NFPA 70), sections 504, 505' and the 'Canadian electrical code (C22.1-02)'.

Apparatus connected to the flowmeter must have appropriate explosion protection approval in accordance with the Entity concept.
The apparatus must have intrinsically safe circuits.
The apparatus must be installed and connected in accordance with the relevant manufacturer documentation.
The electrical specifications in **Electrical data** on page 83 must be observed.

Questionnaire

Customer:	**Date:**
Ms. / Mr.:	**Department:**
Telephone:	**Fax:**

Measuring medium:	Liquid content:	Gas content:
Flow rate: (min., max., operating point)	kg/h	
Density: (min., max., operating point)	kg/m^3	
Dynamic viscosity: (min., max., operating point)	mPas/cP	
Measuring medium temperature: (min., max., operating point)	°C	
Ambient temperature	°C	
Pressure: (min., max., operating point)	bar	
Rate of flow:	☐ Steady	☐ Pulsating
Batch operation:	☐ Yes	☐ No
Concentration calculation:	☐ Yes	☐ No
Transmitter design:	☐ Integral mount design	☐ Remote mount design
Explosion protection:	☐ Yes	☐ No
Power supply:	☐ 100 to 230 V AC, 50/60 Hz	☐ 11 to 30 V DC
Electrical outputs:		**Communication**:
	☐ Current output I: 0/4 to 20 mA	☐ HART protocol
	☐ Current output II: 0/4 to 20 mA	
	☐ Current output III: 0/4 to 20 mA	
	☐ Pulse output, active	
	☐ Pulse output, passive	
Additional specifications:		
Pipeline diameter:	.....mm	
Process connection:	.....	

Trademarks

HART is a registered trademark of FieldComm Group, Austin, Texas, USA

Modbus is a registered trademark of the Modbus Organization

Hastelloy C-4 is a trademark of Haynes International

Hastelloy C-22 is a trademark of Haynes International

Sales

Service

Notes

Notes

ABB Limited
Measurement & Analytics
Howard Road, St. Neots
Cambridgeshire, PE19 8EU
UK
Tel: +44 (0)870 600 6122
Fax: +44 (0)1480 213 339
Mail: enquiries.mp.uk@gb.abb.com

ABB Inc.
Measurement & Analytics
125 E. County Line Road
Warminster, PA 18974
USA
Tel: +1 215 674 6000
Fax: +1 215 674 7183

ABB Automation Products GmbH
Measurement & Analytics
Dransfelder Str. 2
37079 Goettingen
Germany
Tel: +49 551 905-0
Fax: +49 551 905-777
Mail: vertrieb.messtechnik-produkte@de.abb.com

abb.com/flow

3KXF411010R1001

DS/FCB400/FCH400-EN Rev. H 05.2018